cinergia

Control
Intel.ligent
de l'energia

Electronic Load (EL+ AC)

Installation and operation manual

INDEX

1. INTRODUCTION

Dear customer, on behalf of CINERGIA team, thank you for the confidence placed in our company and for the purchase of this product. Please, read carefully this manual before using the equipment to get familiarized with it and to obtain the maximum performance from it.

This document is intended for appropriately qualified personnel. Only personnel with the appropriate skills are allowed to perform the electrical connection and commissioning of the equipment.

The information in this documentation is not binding. CINERGIA reserves the right to make changes in part or in the whole at any time and without prior notice due to technical advance or product improvement.

1.1. Symbols used

DANGER: Indicates a hazardous situation which can result in death or serious injury and can cause important damage or destruction of the equipment or the property.

WARNING: Indicates important information that must be taken into account to operate the equipment. Take the appropriate prevention measures.

INFORMATION: Information that is important but is not safety-relevant.

1.2. Safety notes

Improper use of this equipment can cause both important personal injury and physical damage to the electrical power grid and the loads connected to it. Read this document carefully and follow all safety precautions at all times.

1.3. Quality and regulations

The equipment is based on a hardware designed, manufactured and commercialized in accordance with the standard EN ISO 9001 of Quality Management Systems. The marking shows conformity to the EEC Directive by means of application of the following standards:

• 2006/95/EC Low voltage directive.

• 2004/108/EC Electromagnetic Compatibility directive (EMC)

In accordance with the specifications of the harmonized standards:

• EN-IEC 62040-1. Uninterruptible power supply (UPS). Part 1-1: General and safety requirements for UPS's used in accessible areas by end users.

• EN-IEC 60950-1. IT equipments. Safety. Part 1: General requirements.

• EN-IEC 62040-2. Uninterruptible power supply (UPS). Part 2: Prescriptions for Electromagnetic compatibility (EMC).

• EN-IEC 62040-3. Uninterruptible power supply (UPS). Part 3: Methods of operation specification and test requirements.

The manufacturer responsibility is excluded in the event of any modification or intervention in the product by the customer's side.

2. PRESENTATION

2.1. Introduction

As an electronic load, the EL is designed to test electric and electronic equipment in linear and non-linear AC. It allows to verify the functionality of the Equipment Under Test (EUT) in normal and fault operation.

The main functionalities of the EL are the following:

- It converts the AC input, of the main grid, in a controlled AC output by using an IGBT-based switching topology and DSP-based state-of-the-art digital control.
- It can be operated as:
  - CI: Constant Impedance output
  - CC: Constant Current output with harmonic definition
  - CP: Constant Power output
- As a bidirectional converter, energy can flow from the grid to the EUT or vice versa. It allows energy saving during the tests by returning energy to the power grid.
- The AC current consumed from the grid is sinusoidal (THD < 6%).
- The user can define the reactive power to be injected by the EL and also choose between capacitive or inductive.

The power range covered by the EL electronic loads goes from 6.75 to 160kW. The parallelization of ELs is also possible to increase power:

REFERENCE	RATED POWER (25ºC)		RATED CURRENT (25ºC)				WEIGHT	DIMENSIONS
	kVA	kW	Independent mode		Parallel mode		kg	DxWxH (mm)
			Arms/ch	Adc/ch	Arms	Adc		
EL7.5-AC&DC	7.5	6.75	±10A	±10A	30A	±30A	150	770x450x1100
EL10-AC&DC	10	9	±15A	±15A	45A	±45A	150	
EL15-AC&DC	15	13.5	±20A	±20A	60A	±60A	150	
EL20-AC&DC	20	18	±25A	±25A	75A	±75A	150	
EL30-AC&DC	30	27	±40A	±30A	120A	±90A	150	
EL40-AC&DC	40	36	±50A	±38A	150A	±115A	185	
EL50-AC&DC	50	45	±65A	±47A	195A	±140A	185	
EL60-AC&DC	60	54	±80A	±57A	240A	±180A	185	
EL80-AC&DC	80	72	±105A	±105A	315A	±315A	265	880x590x1320
EL100-AC&DC	100	90	±130A	±130A	390A	±390A	290	
EL120-AC&DC	120	108	±155A	±130A	465A	±390A	290	
EL160-AC&DC	160	128	±185A	±155A	555A	±465A	540	850x900x2000
EL200-AC&DC	200	160	±230A	±185A	690A	±555A	550	

2.2. Converter features

MAGNITUDE		VALUE	
Power		7.5kVA-200kVA	
Input side (GRID side)			
AC Voltage	Rated	3x400Vrms+Neutral+Earth	
Voltage range		+15% / -20%	
Rated AC Current	Depends on model (see table)	10-290Arms per phase	
Frequency		48-62Hz	
THDi	(at rated power)	<3%	
Power Factor	Typical at rated power	≥0.99	
	Configurable by user	0-1 (capacitive/inductive)	
Efficiency	(at rated power)	>92%	
Overload		125% for 10 min /150% for 60 s	
Output side (EUT side)			
AC Voltage	Rated maximum, ch-neutral	25-277Vrms (10-100Hz)	
		25-210Vrms (101-200Hz)	
		25-150Vrms (201-400Hz)	
Rated AC Current	Independent mode	10-230Arms per channel	
	Parallel mode	30-690Arms global	
Frequency	Fundamental current	10-400Hz	
Power factor	Configurable by user	0-1 (capacitive/inductive)	
Harmonic	Configurable by user	1st – 15th at 50Hz	
		1st -13th at 60Hz	
		1st above 100Hz	
Harmonic content	Maximum %	1st – 9th : 100%	
		11th: 50%, 13th -15th: 20%	
Crest factor		<3	
Modes of operation	Range	Resolution	Ripple
Constant Current	0-±100%	<±0.1%	<1%
Constant Power	0-±100%	<±0.1%	<1%
Constant Impedance (R,L,C)	min.-100%	<±0.1%	<1%
Power amplifier	catalogue	<±0.1%	<1%
Response time	Rated resistance load	1-5ms (10-90%)	
General			
Measurements	Input Voltage (Vrms) and current (Irms)		
	Input and Output Power		
	Output voltage (Vrms) and current (Irms)		
	Temperatures		
User interface	4.3’’ Touchscreen		
	Digital Control: 4 digital inputs, 3 digital outputs (8mA max).		
	6 analogue output. 6 analogue input		
	Communication Port: Ethernet (Optionals: RS485, RS232, CAN)		
	Communication Protocol: Modbus/TCP		
Humidity	10-90% (Absolute maximum, without condensation)		
Temperature	5-35ºC (Absolute maximum)		
Cooling	Forced air		
Protections	Over Current, Over Voltage, Shortcircuit, Overtemperature		
Standards			
CE Marking			

Safety	EN-62040-1-2,EN-60950-1
EMC	EMC: EN-62040-2

Please note that items marked as optional shall be requested specifically at additional cost.

2.3. Operation and connection modes

The output of the power converter is formed by three phases referenced to the neutral point of the system (N). Consequently, the user can choose between four possible connection modes for the electronic load:

- Independent phases: Three phase power control. Each phase (U,V,W) is controlled independently. The current setpoint can be different in angle and magnitude for each of the three phases.

Four operation modes are allowed:

- Constant Impedance (CI): the output impedance is controlled to the set point value. The emulator will perform as a constant R ,L ,C (in case of choosing the DC Output option, only a constant R will be emulated).
- Constant Current (CC): the output current is controlled to the set point value. In this mode, the harmonic content of the current drawn by the equipment is configurable up to 15th.
- Constant Power (CP): the output active and reactive power is regulated to the set point value.
- Power amplifier: the output of the converter will be the same waveform as the analogue input.

2.4. Configuration and control of the converter

The converter can be interfaced by three means:

- Local touchscreen: a 4.3” color local touchscreen panel can be used to configure, monitor and operate the electronic load. See section *Local Touchscreen Control Panel* for further information.
- Analog/Digital inputs/outputs: the converter owns 6 isolated analog inputs (+/-10V) and two optocoupled digital inputs. The converter owns 6 analogue outputs and 3 digital outputs (8mA max).
- Remote interface: An Ethernet communication interface with protocol MODBUS/TCP can be used to configure, monitor and operate the electronic load. By using HMI software application provided by CINERGIA, uploading of excel files is also possible.

2.5. Functional diagram

The diagram below is the conceptual function block diagram of the converter:

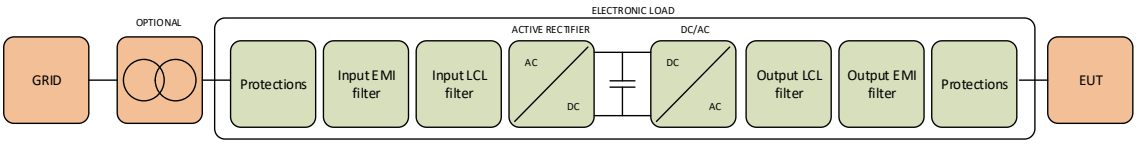

The main components of the diagram are the following (from grid side to EUT side):

- Isolation transformer: a 50/60Hz isolation transformer can be provided optionally in order to isolate the output phases. In this case, an isolation monitor can be integrated in the converter also to detect isolation faults.
- Input protections: these protections include a thermal-magnetic circuit breaker and fuses. The connection of the converter input with the grid is done by screw terminals. Please follow the safety instructions in the *Installation* section to connect the electronic load.
- Input EMI filter: an electromagnetic filter is integrated to fulfil electromagnetic compatibility regulations. The structure of the filter is the same as the one of the output EMI filter.
- Input LCL filter: the purpose of this filter is to reduce the current distortion at frequencies equal to or higher than switching frequency and reduce THD.
- Active Rectifier: a three-branch IGBT active front end is integrated in the equipment to consume/inject a sinusoidal current from/into the grid.
  The DC link voltage is set to 800V providing a regulation margin for fast transients at the output of the electronic load.
  The active rectifier has bidirectional power flow capability and the injected reactive power (grid side) can be defined by the customer.
- DC/AC output converter: it is a three-branch IGBT converter. Its topology is the three phase inverter and allows the conversion from the DC bus to each of the output AC phases.
  The user can choose between having each phase controlled independently or having the three of them controlled as a unique phase (sharing the same operation mode and setpoints).
- Output LCL filter: analogously to the input LCL filter, the filter reduces the current distortion (caused by switching) at the output of the electronic load.
- Output protections: a disconnector is provided to isolate the output from the EUT. Screw terminals are also integrated to connect the EUT. Please, follow safety instructions in *Installation* section to connect them.

2.6. Principle of operation

Below, a technical diagram of the converter is shown:

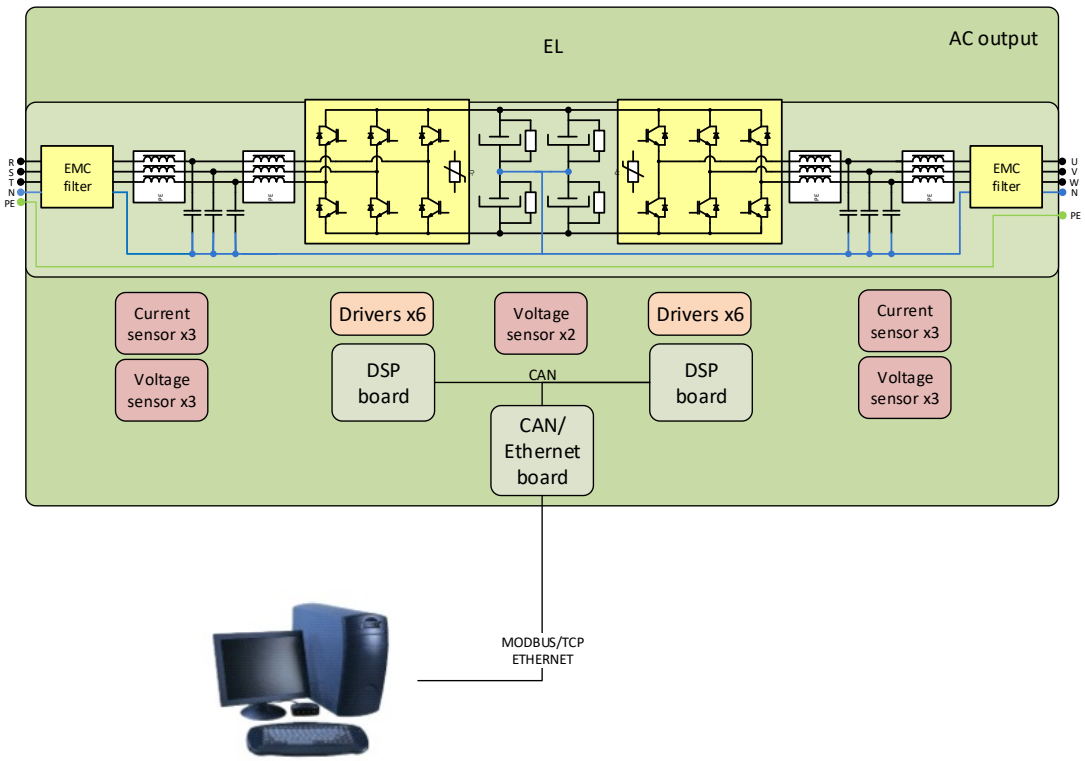

(Please note that earth protection cable is only connected to the cabinet chassis).

State-of-the-art digital control is used in all CINERGIA products. In the EL case, the control system algorithms are computed in two DSP based hardware, designed by CINERGIA, allowing a multitask execution of the regulation systems for the Active Rectifier and the Inverter output. This produces a fast transient response and a high performance against EUT changes. A 12 bits analog to digital conversion, with digital processing, allows a high resolution output up to 0.1%.

I. Resonant control (only AC)

Control algorithms based on Resonant controllers are used in both AC sides; i.e. Resonant Control is always used in grid side but it is used in EUT side only when AC output option is chosen for the electronic load.

The algorithms regulation is structured in blocks resonating at a given frequency. Within the resonant frequency each block allows the suppression of gain and phase errors of the current. Thanks to this, each harmonic can be controlled independently and thus it can be generated or suppressed, as needed.

The following diagram illustrates how the mentioned algorithms operate:

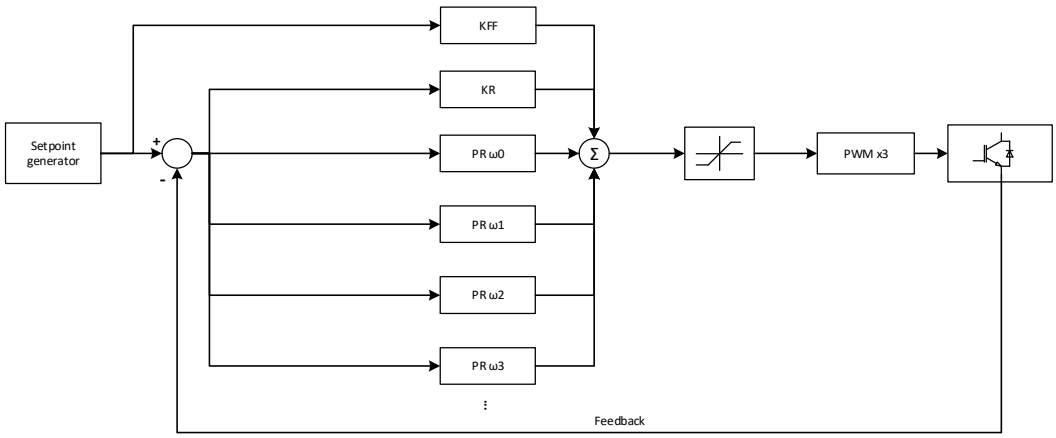

Therefore, the main characteristics of the Resonant Control applied are the ones listed below:

- Control loop rate of 15 kHz.
- Harmonics controlled up to 760Hz*
- 15 control loops executed per phase.
- 45 control loops executed in total (for the 3 phases).
- Each control loop controls independently magnitude and angle of one harmonic.
- Any kind of load can be implemented in the EUT side.
- All harmonics can be suppressed in the grid side.

** It should be noted that the equipment bandwidth is 800 Hz. Therefore, the harmonic content will be determined by the bandwidth as well as by the fundamental frequency specified by the user.*

Finally, the following pictures are some examples of how the EL Resonant Control can work. It is important to take into account that, in these three pictures:

- <u>Yellow waveform:</u> input $U_{phase-N}$
- <u>Green waveform:</u> input $I_{phase-N}$
- <u>Pink waveform:</u> output $U_{phase-N}$
- <u>Blue waveform:</u> output $I_{phase-N}$

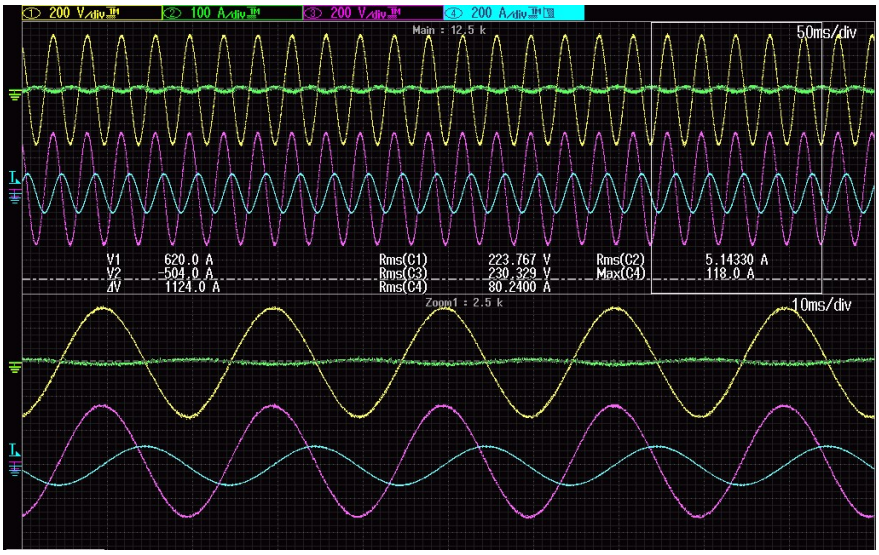

In this case, there is reactive power consumption from the EUT (PF = 0) and no power is injected into the grid.

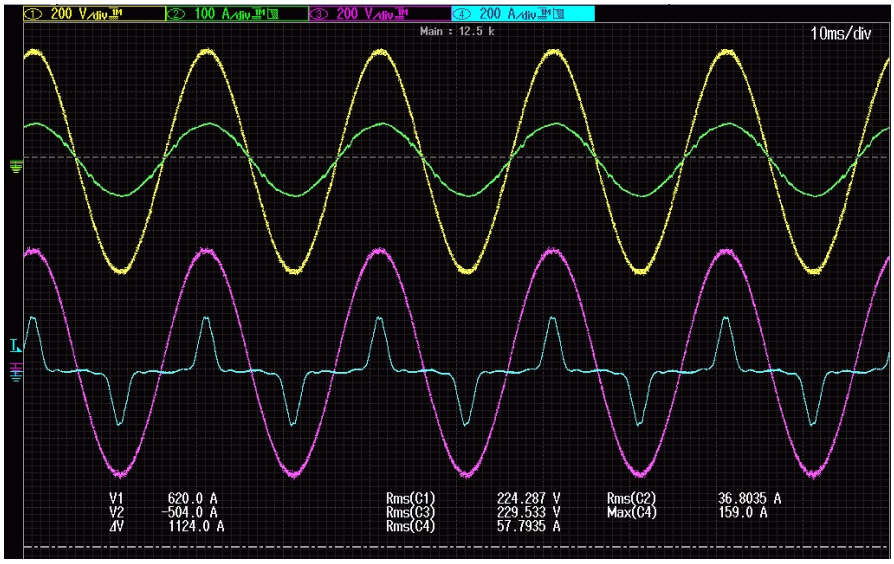

In this second picture, the EL is behaving like a single-phase rectifier.

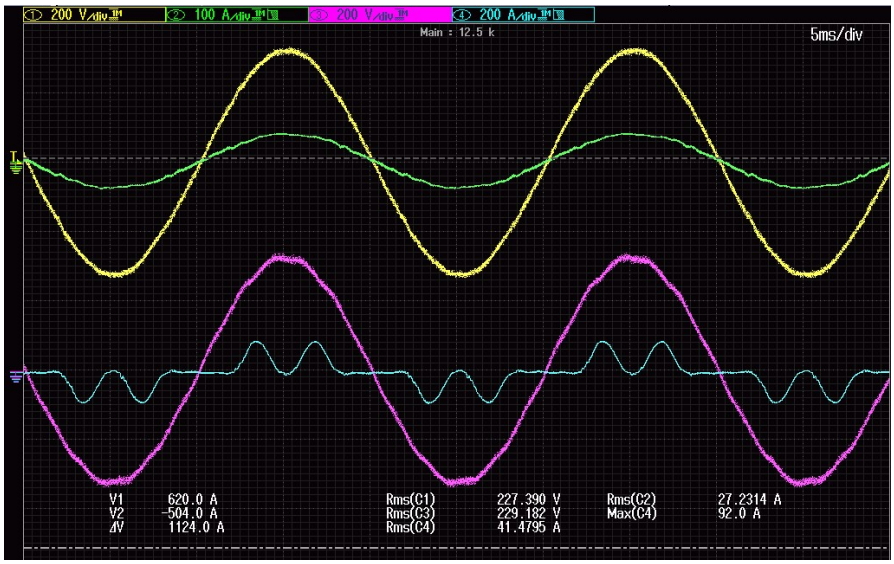

In this last case, the EL is behaving like a three-phase rectifier.

3. INSTALLATION AND WIRING RECOMENDATIONS

Dear Client:

CINERGIA is committed with the continuous improvement of the Service and Technical Support offered to you. For this reason, we are glad to provide you this guide of recommendations to install and start up the unit where you will find advice and recommendations for the installation of the equipment that you have just acquired.

We advise you to follow these instructions carefully and to contact us in case of any question or comment. If the commissioning of the unit has been agreed with CINERGIA or one of our distributors, please follow the recommendations in this document and once the installation is finished contact us to agree an appointment.

3.1. Requirements and process to locate and fit in the equipment

- The room where the equipment will be placed must be clean and aired, leaving a space around the equipment of 60 cm.
- Unpack and place the equipment in its final location. Check that input and output connections are the same as the ones stated in the installation diagram. Terminal layout can differ from attached diagram, please pay attention to the equipment labelling when doing the connection.
- Proceed to make and connect the installation according to the diagram and table below. It is advisable to install all protection circuit breakers in a dedicated cabinet.
- Cables from electrical installation must have the suitable terminals to be connected on the terminals used in the equipment. Cable used in the installation has to be flexible and its length should be enough to allow moving the equipment without needing to disconnect it.

3.2. Installation features

- Cross cable section is recommended and based in the Spanish regulations. It is compulsory to respect the Local and/or National Low Voltage Regulations so please check the recommended values with respect to your local regulations.
- Recommended cross section with XLPW cable (cross linked polyethylene) is for a maximum total installed cable length of 30 meters.
- If the Equipment Under Test is a power electronics device we recommend to size the neutral wire to 200% of phase section.
- Cables trunks should be done over perforated shelves.
- The environmental conditions considered to calculate the recommended cross cable sections, in accordance with the Spanish regulations, are:
    - Ambient temperature: +40ºC.
    - Correction factor to install all input(s)/output cables of each single equipment in the same cable conduit.
    - Correction factor to install the input(s)/output cables of the system (equipments in parallel) in separate cable conduits.
- In case of installing fuses instead of moulded case circuit breakers, the fuses must be DIN gG/gL type.
- Recommended protection sizes do not provide selectivity with those in the equipment. If needed, choose a higher size than the recommended and size accordingly the cables.

3.3. Isolation transformer

CINERGIA standard units are not galvanically isolated from the grid. Therefore the output terminals (including the negative rail and the neutral) are referenced electrically to the grid neutral. CINERGIA offers an Isolation Transformer as an optional for those test setups that require galvanic isolation. The necessity of an Isolation Transformer depends on the Equipment Under Test and the electrical installation of the laboratory (TT, TN or IT system).

In case of DC models (B2C, EL-DC, DCPS, BE, or any AC&DC model in DC) the customer MUST install an isolation transformer in case of DC equipment if the EUT (Equipment Under Test) is NOT isolated to the GRID. If not, there is risk of damage to the CINERGIA unit or the EUT.

In case of DC models (B2C, EL-DC, DCPS, BE, or any AC&DC model in DC) CINERGIA <u>recommends</u> installing an isolation transformer even if the EUT is galvanically isolated from the GRID.

Please, ask to CINERGIA if your equipment has DC mode and does not integrate an isolation transformer.

Note that the internal or external transformer is an optional.

When an Insulation Transformer is used the output terminals of the unit form an IT system. Please follow the local electrical safety regulations concerning IT systems and install an Insulation Monitor Relay when required

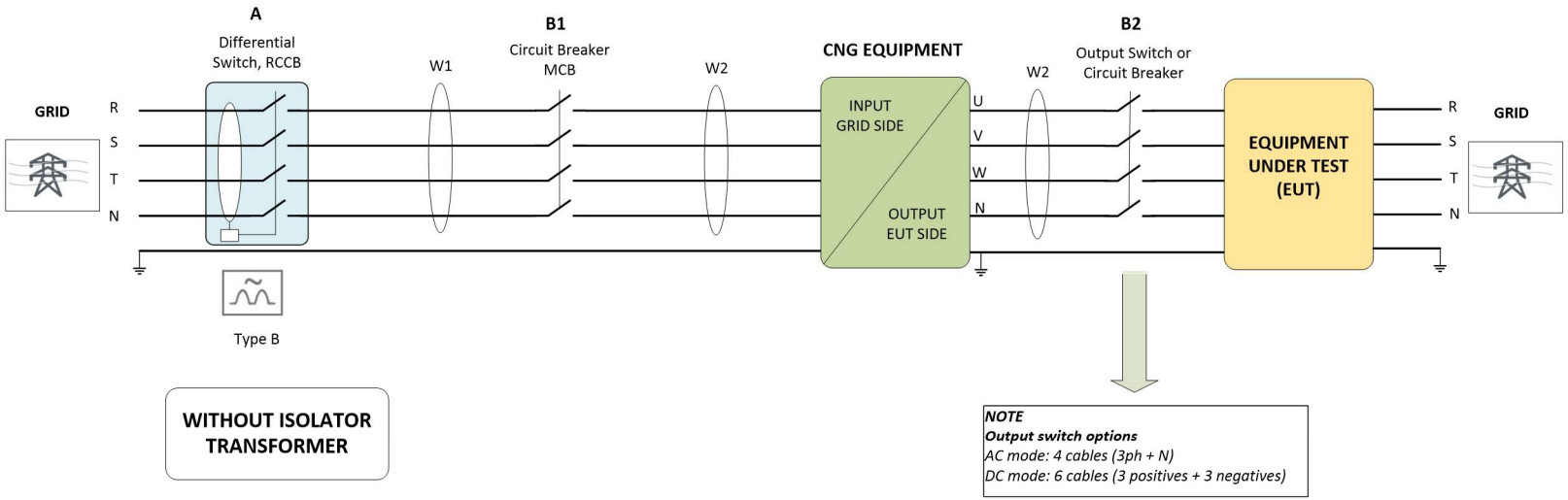
A
Differential Switch, RCCB
B1
Circuit Breaker MCB
W1
W2
CNG EQUIPMENT
INPUT GRID SIDE
OUTPUT EUT SIDE
U
V
W
N
W2
B2
Output Switch or Circuit Breaker
EQUIPMENT UNDER TEST (EUT)
GRID
R
S
T
N
GRID
R
S
T
N
Type B
WITHOUT ISOLATOR TRANSFORMER
NOTE
Output switch options
AC mode: 4 cables (3ph + N)
DC mode: 6 cables (3 positives + 3 negatives)

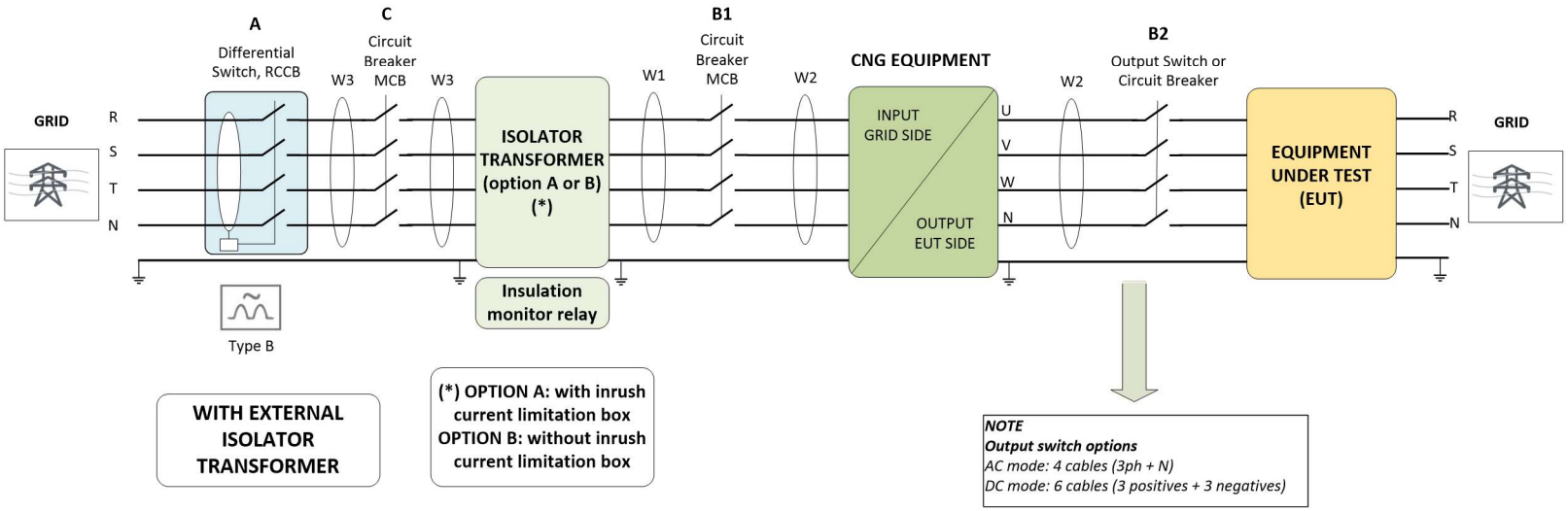
A
Differential Switch, RCCB
C
Circuit Breaker MCB
W3
W3
ISOLATOR TRANSFORMER (option A or B) (*)
Insulation monitor relay
W1
B1
Circuit Breaker MCB
W2
CNG EQUIPMENT
INPUT GRID SIDE
OUTPUT EUT SIDE
U
V
W
N
W2
B2
Output Switch or Circuit Breaker
EQUIPMENT UNDER TEST (EUT)
GRID
R
S
T
N
GRID
R
S
T
N
Type B
WITH EXTERNAL ISOLATOR TRANSFORMER
(*) OPTION A: with inrush current limitation box
OPTION B: without inrush current limitation box
NOTE
Output switch options
AC mode: 4 cables (3ph + N)
DC mode: 6 cables (3 positives + 3 negatives)

3.4. Case External Isolation Transformer with or without inrush current limitation box

Following the recommendations from the transformer manufacturer, the recommended protection for the primary (grid) side of the transformer is a moulded circuit breaker type **D** rated current.

Please note that the isolation transformer presents a high inrush current due to the magnetizing of the transformer core. If this inrush current trips an upstream circuit breaker we recommend to install an inrush current limitation box.

In case to install an isolation transformer, it is recommended to install an **insulation monitor relay,** to detect and recognize insulation faults in a IT system.

3.4.1. OPTION A: WITH INRUSH CURRENT LIMITATION BOX

Following Spanish regulations, the recommended protections and wires are:

- Grid side RCD – **A** indicated on diagram page 3: 300mA, type **B**, > rated current (as indicated on table below)
- Grid side MCB – **C** indicated on diagram page 3: Rated current, type **C**
- Wire from grid to transformer primary – **W3** indicated on diagram page 3: wire W3 indicated on table below, 3 phase + neutral + PE. The size of PE cable will depend on local regulations and electrical system (TN, TT, IT, etc…)

The above **recommended protections** are useful in case that CINERGIA provides the transformer. In case that a third party supplies the transformer, please follow the recommendations from the transformer manufacturer.

From transformer secondary to CINERGIA equipment input (grid side)

- MCB, rated current – **B1** indicated on diagram page 3, type **C**
- Wire from transformer secondary to GE input – **W2** indicated on diagram page 3: wire indicated on table below, 3 phase + neutral. The size of PE cable will depend on local regulations and electrical system (TN, TT, IT, etc…)

From CNG equipment output to Equipment under test:

- Wire indicated on table below – **W2** indicated on diagram page 3: 3 phase + neutral (in AD mode) or 3 phase + 3 negative common (in DC mode). The size of PE cable will depend on local regulations and electrical system (TN, TT, IT, etc…)

Please, check that the above recommendations fulfil with your country or zone regulations.

3.4.2. OPTION B: WITHOUT INRUSH CURRENT LIMITATION BOX

Following Spanish regulations, the recommended protections and wires are:

- Grid side RCD **A** indicated on diagram page 3: 300mA, type **B**, > 2 x rated current (two times rated current)
- Grid side MCB – **C** indicated on diagram page 3: 2 x Rated current (two times rated current), type **D**
- Wire from grid to transformer primary – **W3** indicated on diagram page 3: wire correspond as two times rated current, 3 phase + neutral + PE. The size of PE cable will depend on local regulations and electrical system (TN, TT, IT, etc…)

The above **recommended protections** are useful in case that CINERGIA provides the transformer. In case that a third party supplies the transformer, please follow the recommendations from the transformer manufacturer.

From transformer secondary to CNG equipment input (grid side)

- MCB, rated current – **B1** indicated on diagram page 3, type **C**
- Wire from transformer secondary to GE input – **W2** indicated on diagram page 3: wire indicated on table below, 3 phase + neutral. The size of PE cable will depend on local regulations and electrical system (TN, TT, IT, etc…)

From CNG equipment output to Equipment under test:

- Wire indicated on table below – **W2** indicated on diagram page 3: 3 phase + neutral (in AD mode) or 3 phase + 3 negative common (in DC mode). The size of PE cable will depend on local regulations and electrical system (TN, TT, IT, etc…)

Please, check that the above recommendations fulfil with your country or zone regulations.

3.5. Configuration values of protection and wires

Nomenclature	Description	Characteristics	CNG7.5	CNG10	CNG15	CNG20	CNG 30	CNG40	CNG50	CNG 60
A	Mains RCCB	Rated residual current 300mA to 500mA **type B**								
	(for each equipment)		16A	16A	25A	32A	50A	63A	80A	100A
B1 and B2	Input/Output MCB **type C**	4P – 400Vac – 230Vac coil **type C**	16A	16A	25A	32A	50A	63A	80A	100A
C – OPTION A	MCB **type C**	4P – 400Vac – 230Vac coil **type D**	16A	16A	25A	32A	50A	63A	80A	100A
C – OPTION B	MCB **type D**	4P – 400Vac – 230Vac coil **type D**	Depends on Power Transformer - two times of rated current of the transformer (take the same power as rated power of the equipment)							
			32A	32A	50A	63A	100A	125A	160A	200A
W1 (*)	General rectifier line cable section									
	Configuration 1+0 / 1+1	RZ1-K	4 mm^2	4 mm^2	6 mm^2	6 mm^2	10 mm^2	16 mm^2	25 mm^2	35 mm^2
W2 (*)	Individual rectifier line cable section	RZ1-K	4 mm^2	4 mm^2	6 mm^2	6 mm^2	10 mm^2	16 mm^2	25 mm^2	35 mm^2
W3 (*)	Individual rectifier line cable section	RZ1-K	Depends on Power Transformer - two times of rated current of the transformer (take the same power as rated power of the equipment)							
			6 mm^2	6 mm^2	10 mm^2	16 mm^2	25 mm^2	35 mm^2	50 mm^2	70 mm^2

Nomenclature	Description	Characteristics	CNG80	CNG100	CNG120	CNG160	CNG 200
A	Mains RCCB (for each equipment)	Rated residual current 300mA to 500mA **type B**	125A	160A	200A	250A	315A
B1 and B2	Input/Output MCB **type C**	4P – 400Vac – 230Vac coil **type C**	125A	160A	200A	250A	300A
C – OPTION A	MCB **type C**	4P – 400Vac – 230Vac coil **type D**	125A	160A	200A	250A	300A
C – OPTION B	MCB **type D**	4P – 400Vac – 230Vac coil **type D**	Depends on Power Transformer - two times of rated current of the transformer (take the same power as rated power of the equipment)				
			250A	315A	-	-	-
Nomenclature	Description	Characteristics	CNG80	CNG100	CNG120	CNG160	CNG 200
W1 (*)	General rectifier line cable section						
	Configuration 1+0 / 1+1	RZ1-K	50 mm²	70 mm²	95 mm²	120 mm²	240mm²
W2 (*)	Individual rectifier line cable section	RZ1-K	50 mm²	70 mm²	95 mm²	120 mm²	240mm²
W3 (*)	Individual rectifier line cable section	RZ1-K	Depends on Power Transformer - two times of rated current of the transformer (take the same power as rated power of the equipment)				
			120mm²	240mm²	-	-	-

(*) A connection or cable distance less than 10 meters is recommended.

The sizing of the wires and protections has been calculated considering rated grid voltage (230Vrms phase-neutral) and rated power. Please calculate the size of wire and protections in case that:

- The unit will be supplied permanently with an input voltage within 230Vrms,p-n – 20%
- The unit will be overloaded within 125% (during 10 minutes) or 150% (during 1 minute)

All figures are calculated for a **maximum total cable length of 10 m** between the equipment and the EUT.

3.6. Configuration values of suitable terminal metric

Cables from electrical installation must have the suitable terminal metric value to connect on:

Nomenclature	Characteristics	CNG7.5	CNG10	CNG15	CNG20	CNG 30	CNG40	CNG50	CNG 60	CNG80	CNG100	CNG120	CNG160	CNG 200
Input Electrical Connection	Terminal Metric Value	M6	M6	M6	M6	M6	M8	M8	M8	M10	M10	M10	M10	M10
Output AC Electrical Connection	Terminal Metric Value	M6	M6	M6	M6	M6	M8	M8	M8	M10	M10	M10	M10	M10
Common Electrical Connection	Terminal Metric Value	M6	M6	M6	M6	M6	M8	M8	M8	M10	M10	M10	M10	M10

The values on all the tables in this document are valid for voltages of 230V.

4. INSTALLATION

4.1. Important safety instructions

As a device with class I protection against electric shocks, it is essential to install a protective earth wire (connect earth). Connect the protection earth wire to the terminal (**X5**) before connecting the grid to the electronic load input.

All the electrical connections, including those for control (interface, remote control…etc.), shall be done with all the switches in OFF position and with the mains supply disconnected (thermal-magnetic circuit breaker in OFF position too).

It must never be forgotten that the EL is a power converter, so users must take all necessary precautions against direct or indirect contact.

Warning labels should be placed on all primary power switches installed in places far from the device to alert the electrical maintenance personnel of the presence of a voltage in the circuit up to 10 minutes after stopping the device.

In devices without isolation transformer, precautions must be taken as they are not isolated from the alternating input line, and there might be dangerous voltage between the output phases and the ground.

4.2. Equipment views

Electrical connections:

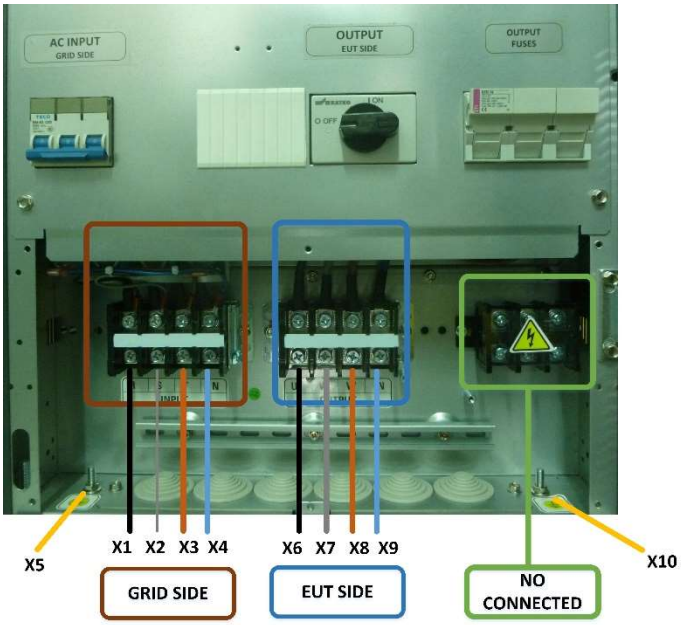

Local front panel:

Front view (with the door open):

Detailed view of the front protections and switches:

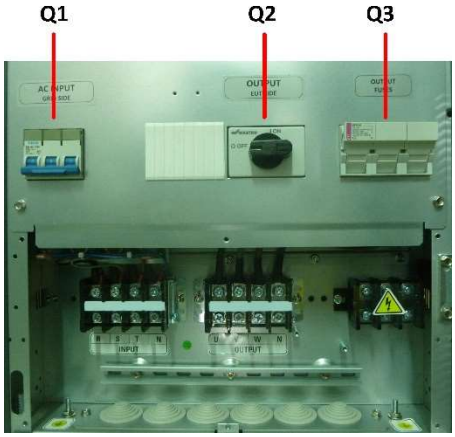

Detailed view of the signal connectors:

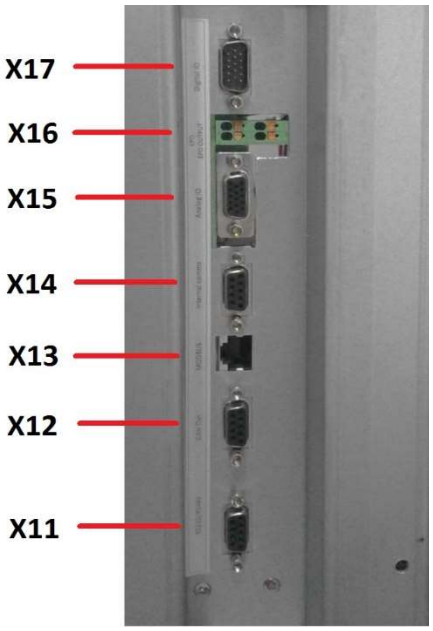

General view (with the front door closed):

Protection elements (Q*):

- **(Q1)** Input thermal-magnetic circuit breaker or disconnector according to power of the equipment.
- **(Q2)** Output disconnector.
- **(Q3)** Output fuses.

Connection elements (X*):

- **(X1)** Phase input terminal R.
- **(X2)** Phase input terminal S.
- **(X3)** Phase input terminal T.
- **(X4)** Neutral input terminal N.
- **(X5)** Earth connection terminal for main supply input ( ).

- **(X6)** Phase output terminal U.
- **(X7)** Phase output terminal V.
- **(X8)** Phase output terminal W.
- **(X9)** Neutral output terminal N.

- **(X10)** Earth connection terminal for EUT ( ).

- **(X11)** DB9 femaleRS232 – RS485 connector for communications (optional).
- **(X12)** DB9 female CAN OUT.
- **(X13)** RJ45 connector for MODBUS interface.
- **(X14)** Internal comms (not used).
- **(X15)** *SUBD_15HD_FA_CI/SOP* connector for analogic inputs and outputs.
- **(X16)** Terminals for external Emergency Power Off (EPO) button.
- **(X17)** *SUBD_15HD_MA_CI/SOP* connector for digital inputs and outputs.

In case of discrepancies between labelling and this manual instruction, the label information will always prevail.

4.3. Equipment reception

4.3.1. Unpacking and checking the content

On receiving the device, make sure that the converter has not suffered any damage during the transportation. Otherwise, make all pertinent claims to the supplier or to CINERGIA.

The packing of the device consists of a wooden palette, a cardboard or wooden packaging (depending on the case), expanded polystyrene corner pieces, a polyethylene sleeve and bands; all recyclable materials. Therefore, they should be disposed of according to current regulations. We recommend to keep the packaging in case its use is necessary in the future.

In order to unpack, cut the bands and remove the cardboard packaging with a vertical movement. In case of wooden packaging, remove it with the appropriate tools. Afterwards, remove the corner pieces and the plastic sleeve. At this point the equipment will be unpacked on the pallet. Please, use suitable tools to lower the converter from the pallet.

After unpacking the equipment, check that the data in the nameplate (stuck on the inner part of the front door) correspond to those specified in the purchase order. Contact the supplier or CINERGIA in case of disconformity.

Keep the equipment in the original package if it will not be used in order to protect it from any possible mechanical damages, dust, dirt, etc…

4.3.2. Storage

The equipment shall be stored in a dry, ventilated place and protected against rain, water jets or chemical agents. It is advisable to keep the converter into its original package, which has been designed to assure the maximum protection during the transport and storage.

Do not store the unit where the ambient temperature exceeds 40ºC or falls below -20ºC

4.3.3. Transport to location

The equipment includes castors to facilitate its transport to its final location.

It is important to check previously if the weight of the converter is appropriate for the site where it will be located.

It is also important to consider the most suitable means to place the converter in its final location (floor, hoist, lift, stairs, etc…).

4.3.4. Location

It is necessary to leave a minimum of 25 cm in the contour of the equipment for its ventilation. If possible, as shown in following figures, it is recommended to leave additional 75 cm to facilitate the operations of maintenance of the equipment or the interventions of the technical service in case of breakdown.

Front view:

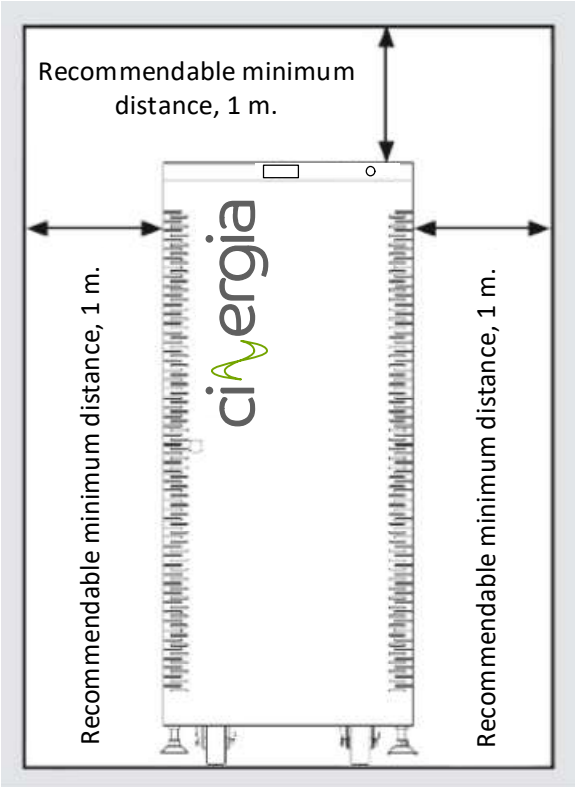

Top view:

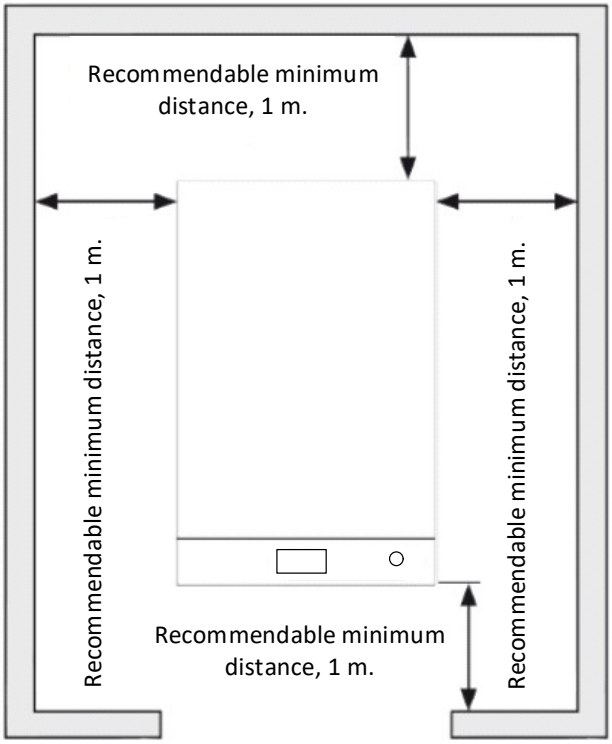

The equipment may be installed in any place as long as the safety and ventilation requirements are fulfilled.

The converter includes 2 levelling elements located near the front castors, which serve to immobilize the unit once it is in place.

To adjust the level, open the front door of the cabinet and proceed as follows:

- By hand, loosen the levelling elements by turning them anticlockwise until they touch the floor, and then, using a spanner, continue loosening until the castors are raised off the floor 0.5 cm maximum.
- Close the door once more.

4.4. Connection

The recommended inspection interval to check terminal torque is once per year.

It is very important to be sure that all connections are done properly.

4.4.1. Earth protection

As a device with class I protection against electric shocks, it is essential to install a protective earth wire (connect earth ⏚). Connect the protection earth wire to the terminal (**X5**) before connecting the grid to the electronic load input.

On the other hand, connect the protection earth wire to the terminal (**X10**) before connecting the EUT to the electronic load output.

4.4.2. Input connection, terminals (X1 to X5).

Connect the grid cables **R**, **S**, **T** and **N** to the terminals (**X1**), (**X2**), (**X3**) and (**X4**) respectively. This connection must always be done according to the label placed under the input screw terminals.

In case of discrepancies between labelling and this manual instructions, **the label information will always prevail**.

4.4.3. Isolation transformer

In case of external isolation transformer, connect grid cables (R, S, T, N) to the primary of the transformer, and secondary of the transformer (R', S', T', N') to the input terminals (**X1**), (**X2**), (**X3**) and (**X4**) of Cinergia equipment. The connections in the transformer are the followings:

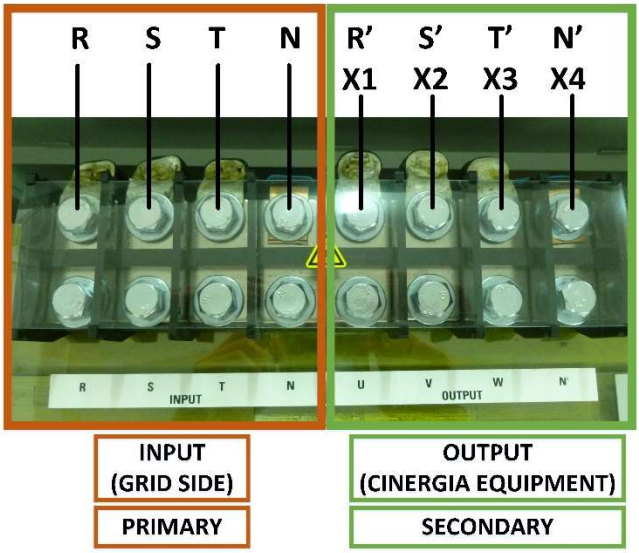

The following image is a simple schematic connection of the transformer between the grid and the Cinergia equipment:

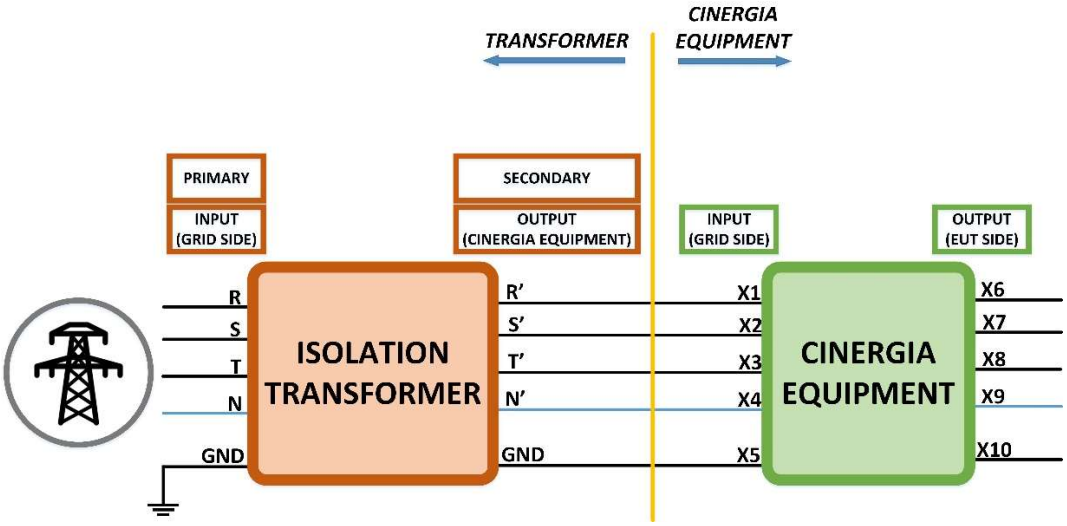

For further information, please go to chapter 3 (*Installation and wiring recommendations)* of this manual or read the document *Installation and wiring recommendations* located inside the USB stick delivered by Cinergia.

Please go to chapter 3 (*Installation and wiring recommendations*) of this manual to read about the electrical protections to be connected.

The ground cable (PE) of the main grid must be connected to ground transformer terminal (yellow-green) and ground Cinergia equipment terminal (X5) in all cases.

4.4.4. Output connection, terminals (X6 to X10)

The equipment has 3 output phases (U, V and W) which are referenced to the neutral point of the system (N). Therefore, the EUT must be connected to one phase/the three phases and the neutral point (phase-N):

- Output phase U (**X6**)
- Output phase V (**X7**)
- Output phase W (**X8**)
- Neutral point N (**X9**)

4.4.5. External Emergency Power Off connection (X12)

CINERGIA units are equipped with a local Emergency Stop pushbutton at the front panel. When this local pushbutton is pressed, the unit will be completely switched off by disconnecting the main contactors at the input and at the output. For safety reasons, the operation is done by hardware.

In addition, CINERGIA units also integrate two terminals dedicated to an external Emergency Power Off (EPO). When these terminals are used, the unit will have two Emergency Pushbuttons active: the local pushbutton and the external-remote pushbutton. This document describes the connection of the external-remote pushbutton (hereafter EPO).

WARNING: the internal circuitry will be damaged if an external power supply is connected to X12 (J15) EPO terminals. Do not connect an external power supply or active signal. Only Normally Closed dry contact is allowed.

The following picture shows the 2 different connection points in **X12**, which are **X12_A** and **X12_B**.

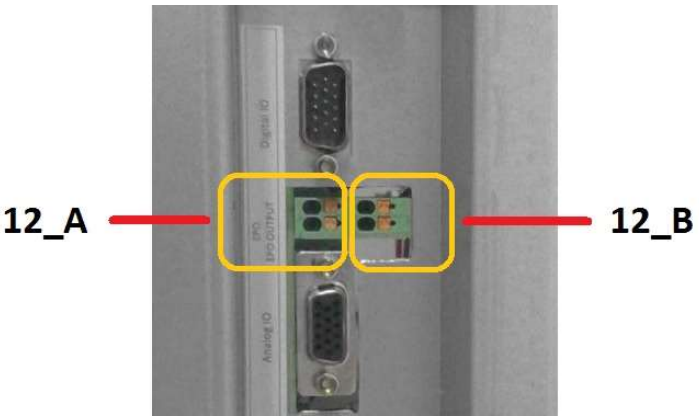

There are three alternatives for connection:

a) Connecting an external Emergency pushbutton to **X12_A** (NC contact, without potential)
b) Installing a cable bridge/shunt to close the circuit in terminal **X12_A** (in case an external EPO is not used)
c) Using the **X12_A** terminals to serialize an external Emergency Power Off sequence

The figures below describe the connection of the EPO.

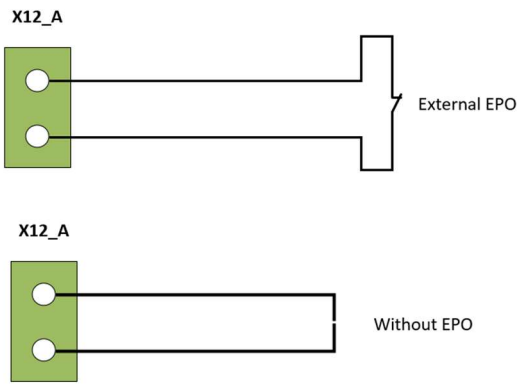

An External Emergency pushbutton (option a) or Cable bridge/shunt (option b) is required

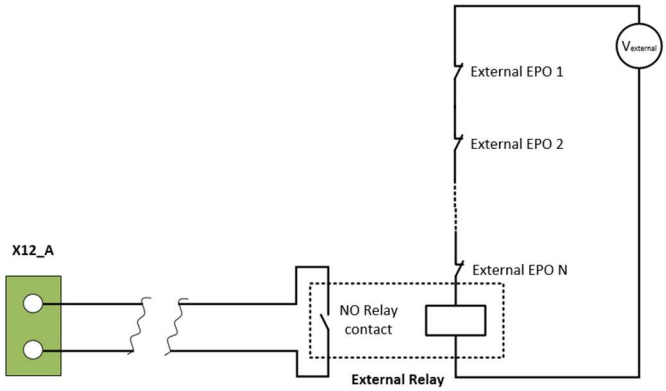

Connection to serialize the Emergency Power Off sequence (option c)

4.4.6. Output signal of local Emergency Stop pushbutton state (EPO OUTPUT)

WARNING: the internal circuitry will be damaged if any external power supply is connected to X12 (J15) EPO terminals. The relay contact allows 230VAC/24VDC switching voltage and 2A switching current. Do not connect any other signal.

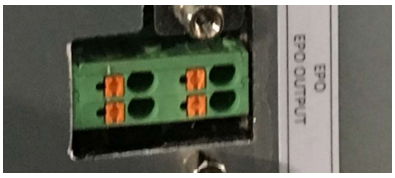

The Emergency Stop pushbutton installed on the front panel of equipment has a normally close contact which indicates the state of it. This output (EPO OTUPUT) will be ACTIVE (NC) when the local emergency stop button is NOT pressed.

This signal is wired to **X12_B**, as the following picture shows:

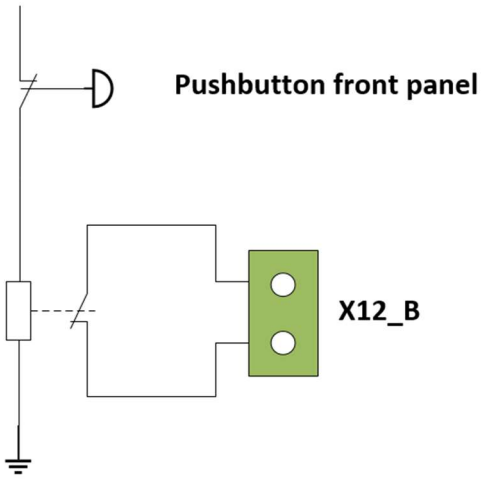

4.4.7. Communications (Optional)

There are several connectors dedicated to communications, which are listed below:

- **(Optional) Connector for RS485/RS232 communications (X11):** DB9 connector to be used when Modbus RS485 option is chosen. It is not possible to have both type of communication protocols running at the same time.
- **(Optional) Connectors for CAN communications (X12):** DB9 connectors to be used when several communications in parallel are required.
- **Connector for MODBUS interface (X13):** RJ45 connector A standard Ethernet cable must be connected between **X13** and PC to communicate a remote PC with the grid emulator. Alternatively, a standard Ethernet cable can be connected between **X13** and a Hub or a Router to communicate a remote PC with the Cinergia converter.

4.4.8. Digital inputs and outputs

Digital inputs and outputs are gathered in **X17.** All of them are isolated.
Specifically, there are 4 digital inputs which operate at **24V** (referenced of GNDMD_RL and VCM24) and 3 digital outputs (maximum current admitted 8mA). The following scheme shows the connector with the pinout:

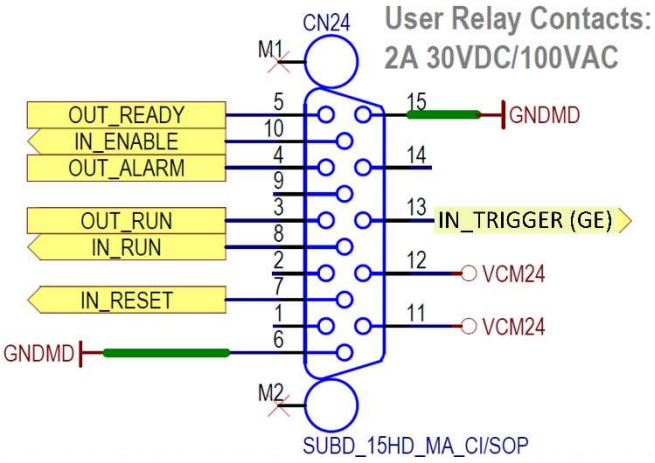

***Please note that the connector for digital inputs and outputs of the equipment is a* SUBD_15HD_MA_CI/SOP, MALE CONNECTOR*. The necessary connector to use it is the* SUBD_15HD_FA_CI/SOP, FEMALE CONNECTOR.**

The maximum admitted input voltage is 24V (REFERENCED TO GNDMD_RL). The digital outputs are 10V. The maximum admitted output current is 8mA.

The list of each digital functionality is the following:

DIGITAL INPUT (Operation of the equipment):

- **PIN 7:** INPUT RESET. Makes a RESET to the equipment.
- **PIN 8:** INPUT RUN/READY. Changes from RUN to READY and vice versa.
- **PIN 10:** INPUT ENABLE/DISABLE. Changes from ENABLE to DISABLE and vice versa.
- **PIN 13:** INPUT TRIGGER (GE). Only available with GE. Allows the start of a configured fault.

OUTPUT:

- **PIN 5:** READY LED. The output will turn on when the equipment is in READY state.
- **PIN 3:** RUN LED. The output will turn on when the equipment is in RUN state.
- **PIN 4:** ALARM LED. The output will turn on when the equipment is in ALARM state.
-

4.4.9. Analog inputs and outputs (AIO)

II. Power amplifier

The EL converter can work as a current amplifier from the analogue inputs. It means that the waveform in the analogue input will appear in the output of the converter knowing that the working range of the analogue input goes from -10Vdc to 10Vdc and the output of the EL goes from the minimum AC peak current to the maximum AC peak current (depending on the catalogue). The equivalence of the currents is shown in the table 2 of the following pages of this manual.

III. Analogue inputs/outputs

The equipment contains 6 analogue inputs and 6 analogue outputs which are gathered in **X15** with a *SUBD_15HD_FA_CI/SOP* connector and the pinout is the following:

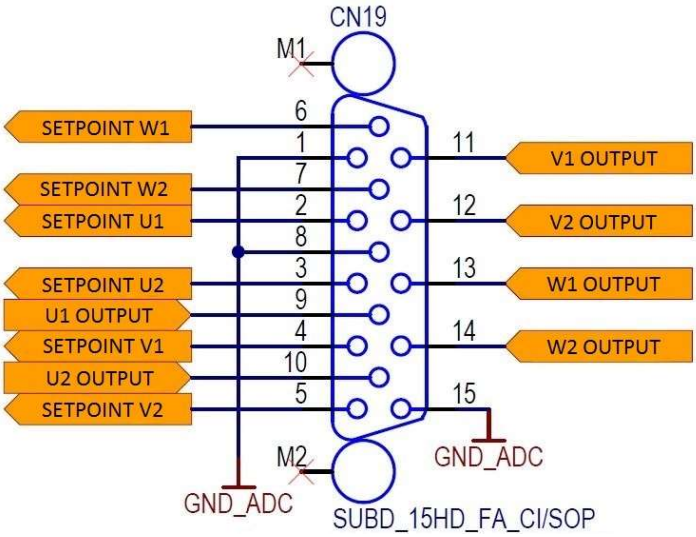

***Please note that the connector for analog inputs and outputs of the equipment is a* SUBD_15HD_FA_CI/SOP, FEMALE CONNECTOR*. The necessary connector to use it is the* SUBD_15HD_MA_CI/SOP, MALE CONNECTOR.**

The analogue inputs and outputs of the converter are isolated.

The analogue inputs accept a voltage range from -10Vdc to +10Vdc (referenced to GND_ADC). The analogue output voltage range values are from -10Vdc to +10Vdc (referenced to GND_ADC).

The output analogue values are used to read the internal value of the equipment. Each output analogue is configurable by the user.

The configuration of each output analogue must be done through the local control LCD touchscreen.

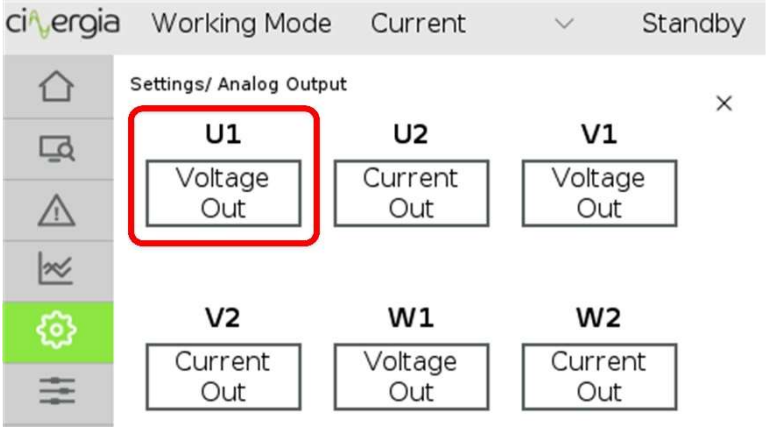

The 6-analogue output are represented.

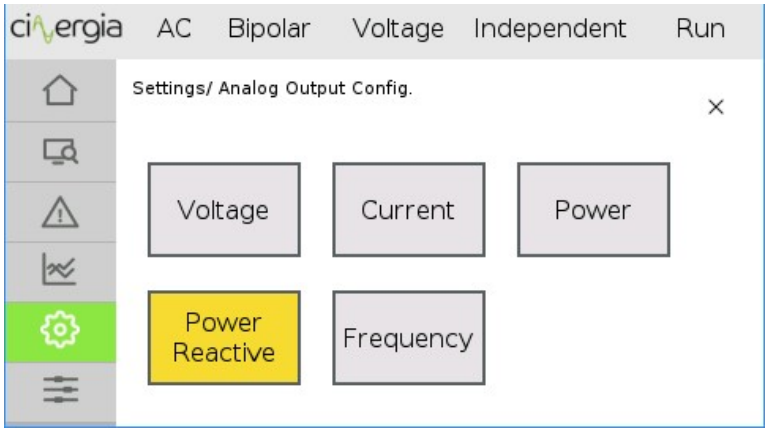

Each analogue configuration values

Each output analogue can be configured by 6 internal variables (of each channel). The range and configuration is shown on Table 1.

Case	Description	Minimum (-10V)	0V	Maximum (10V)
1	**Voltage RMS Output**	*not used*	**0**	`Alarm_OverVoltage_AC_Output`
2	**Current RMS Output**	*not used*	**0**	`Alarm_OverCurrent_RMS_150_AC_Output`
3	**Power Output**	`Alarm_OverLoad_150_POS`	**0**	`Alarm_OverLoad_150_POS`

4	**Reactive Output**	Alarm_OverLoad_150_POS	**0**	Alarm_OverLoad_150_POS
5	**Frequency Output**	*not used*	**0**	Limit_max_freq_out

Table 1 Range and configuration of the output analogue

In case of power amplifier mode, the analogue outputs have a fix configuration displaying the instant values of voltage and current. Processing the output waveform, the user can obtain a wide variety of information such as frequency, maximum peak, phase, RMS, etc. The following table summarize the analogue output disposition and ranges.

Tag	Description	Minimum (-10V)	0V	Maximum (10V)
U1	**Voltage U**	-Limit_max_pic_Voltage_U	**0**	Limit_max_pic_Voltage_U
U2	**Current U**	-Limit_max_pic_Current_U	**0**	Limit_max_pic_Current_U
V1	**Voltage V**	-Limit_max_pic_Voltage_V	**0**	Limit_max_pic_Voltage_V
V2	**Current V**	-Limit_max_pic_Current_V	**0**	Limit_max_pic_Current_V
W1	**Voltage W**	-Limit_max_pic_Voltage_W	**0**	Limit_max_pic_Voltage_W
W2	**Current W**	-Limit_max_pic_Current_W	**0**	Limit_max_pic_Current_W

Table 2 Range and configuration of the analogue outputs at Power amplifier mode

The equipment has 6 analogues inputs to send SETPOINT values to the equipment in **ANALOG** machine setpoints control. The configuration of this control mode must be done through the local control LCD touchscreen.

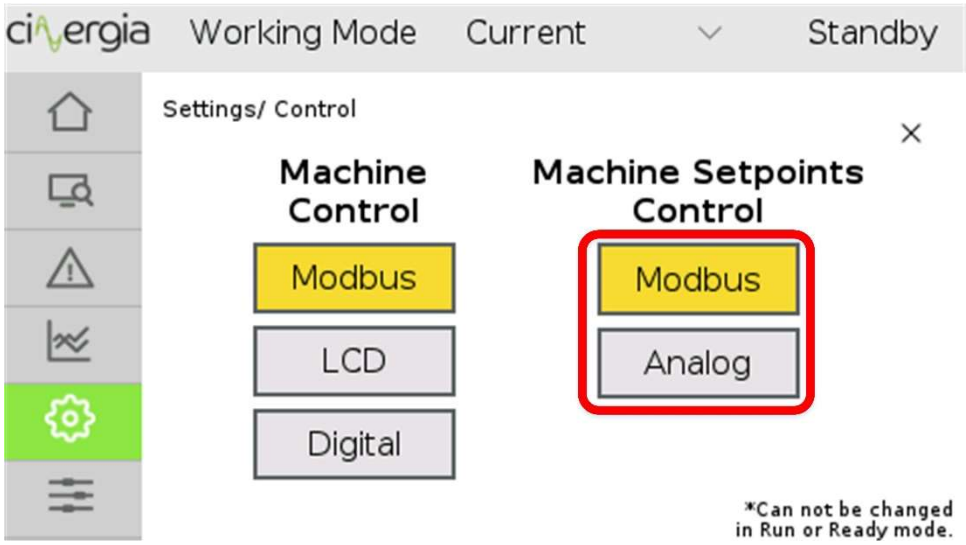

The input analogue values are used to send SETPOINT (SP) to the equipment: there are two input analogue related to each output channel of the power converter; it means that SETPOINT U1 and U2 are used to send SP for channel U.

There are two options:

- **Using 3 analogue inputs:** only SETPOINT_U1, SETPOINT _V1, SETPOINT _W1 are available
- **Using 6 analogue inputs**: all analogue inputs are available (two analogue input per channel).

On the Table 3 it is shown which are the SETPOINT range of each input analogue depend on the control mode of the equipment.

MODE				ANALOG	VARIABLE	-10V MINIMUM	0V MEDIUM	10V MAXIMUM
Voltage source	**Independent**	**Bipolar**	**AC**	U1	Voltage U RMS setpoint	*not used*	*0*	*max voltage AC*
				U2	Phase angle U	*-359º*	*0*	*359º*
				V1	Voltage V RMS setpoint	*not used*	*0*	*max voltage AC*
				V2	Phase angle V	*-359º -120º*	*-120º*	*359º -120º*
				W1	Voltage W RMS setpoint	*not used*	*0*	*max voltage AC*
				W2	Phase angle W	*-359º -240º*	*-240º*	*359º -240º*
Current source	**Independent**	**Bipolar**	**AC**	U1	Current U RMS setpoint	*min current AC*	*0*	*max current AC*
				U2	Phase angle U	*-90º*	*0*	*90º*
				V1	Current V RMS setpoint	*min current AC*	*0*	*max current AC*
				V2	Phase angle V	*-90º*	*0*	*90º*
				W1	Current W RMS setpoint	*min current AC*	*0*	*max current AC*
				W2	Phase angle W	*-90º*	*0*	*90º*
Power source	**Independent**	**Bipolar**	**AC**	U1	Active power U	*min power*	*0*	*max power*
				U2	Reactive power U	*min power*	*0*	*max power*
				V1	Active power V	*min power*	*0*	*max power*
				V2	Reactive power V	*min power*	*0*	*max power*
				W1	Active power W	*min power*	*0*	*max power*
				W2	Reactive power W	*min power*	*0*	*max power*
Impedance	**Independent**	**Bipolar**	**AC**	U1	Resistance U	*not used*	*10000*	*0*
				U2	Inductance U	*not used*	*10000*	*0*
				V1	Resistance V	*not used*	*10000*	*0*
				V2	Inductance V	*not used*	*10000*	*0*
				W1	Resistance W	*not used*	*10000*	*0*
				W2	Inductance W	*not used*	*10000*	*0*

Voltage source	**Parallel**	**Bipolar**	**AC**	U1	Voltage RMS setpoint	*not used*	*0*	*max voltage AC*
				U2	Phase angle	*-359º*	*0*	*359º*
Current source	**Parallel**	**Bipolar**	**AC**	U1	Current RMS setpoint	*min current AC*	*0*	*max current AC*
				U2	Phase angle	*-90º*	*0*	*90º*
Power source	**Parallel**	**Bipolar**	**AC**	U1	Active power	*min power*	*0*	*max power*
				U2	Reactive power	*min power*	*0*	*max power*
Impedance	**Parallel**	**Bipolar**	**AC**	U1	Resistance	*not used*	*10000*	*0*
				U2	Inductance	*not used*	*10000*	*0*
Voltage source	**Independent**	**Unipolar**	**DC**	U1	Voltage U DC setpoint	*not used*	*0*	*max voltage DC*
				V1	Voltage V DC setpoint	*not used*	*0*	*max voltage DC*
				W1	Voltage W DC setpoint	*not used*	*0*	*max voltage DC*
Current source	**Independent**	**Unipolar**	**DC**	U1	Current U DC setpoint	*min current DC*	*0*	*max current DC*
				V1	Current V DC setpoint	*min current DC*	*0*	*max current DC*
				W1	Current W DC setpoint	*min current DC*	*0*	*max current DC*
Power source	**Independent**	**Unipolar**	**DC**	U1	Power U DC setpoint	*min power*	*0*	*max power*
				V1	Power V DC setpoint	*min power*	*0*	*max power*
				W1	Power W DC setpoint	*min power*	*0*	*max power*
Impedance	**Independent**	**Unipolar**	**DC**	U1	Impedance U DC setpoint	*not used*	*10000*	*0*
				V1	Impedance V DC setpoint	*not used*	*10000*	*0*
				W1	Impedance W DC setpoint	*not used*	*10000*	*0*
Voltage source	**Parallel**	**Unipolar**	**DC**	U1	Voltage DC setpoint	*not used*	*0*	*max voltage DC*
Current source	**Parallel**	**Unipolar**	**DC**	U1	Current DC setpoint	*min current DC*	*0*	*max current DC*
Power source	**Parallel**	**Unipolar**	**DC**	U1	Power DC setpoint	*min power*	*0*	*max power*

Current source	**Parallel**	**Unipolar**	**DC**	U1	Resistance	*not used*	*10000*	*0*
Voltage source	**Independent**	**Bipolar**	**DC**	U1	Voltage U DC bipolar setpoint	*min bipolar voltage*	*0*	*max bipolar voltage*
				W1	Voltage W DC bipolar setpoint	*min bipolar voltage*	*0*	*max bipolar voltage*
Current source	**Independent**	**Bipolar**	**DC**	U1	Current U DC bipolar setpoint	*min current DC*	*0*	*max current DC*
				W1	Voltage W DC bipolar setpoint	*min current DC*	*0*	*max current DC*
Power source	**Independent**	**Bipolar**	**DC**	U1	Power U DC bipolar setpoint	*min power*	*0*	*max power*
				W1	Power W DC bipolar setpoint	*min power*	*0*	*max power*
Impedance	**Independent**	**Bipolar**	**DC**	U1	Resistance U DC bipolar setpoint	*not used*	*10000*	*0*
				W1	Resistance W DC bipolar setpoint	*not used*	*10000*	*0*

Table 3 Range value of each input analogue depends on the control of the equipment (AC/DC, independent/parallel, V/I/P/R, Bipolar/Unipolar

Please note that the ELAC converter controls current, power and impedance only in AC case. The table above is valid for all the equipment of CINERGIA.

5. OPERATION

5.1. Safety

Before operating the equipment, check that the Protective Earth is properly connected.

Check out the electrical installation in both sides (input and output) of the cabinet. All wires shall be connected and secured before proceeding to the converter start-up.

When the equipment is turned off, the user has to wait at least 15 seconds before turn it on again.

Before operating the equipment, check that all LIMITS from the equipment are correct. Please take care that CNG equipment are bidirectional, this means that the equipment can consume or inject current. The equipment can operate as a source or as a load.

If the user needs the converter to work as a load, press the button LOAD. In this case the setpoint must be with a negative sign. On the other hand, the converter will work as a source with a positive sign.

The user can configure the positive limit of current and power at 0A and 0W on the LIMIT tab of the interface to be sure that the equipment never will work as a SOURCE.

5.2. State Machine

The operation of the converter is based on 6 different states (rectangles) and 6 transitions (rhombs). Each state defines the behavior and possible actions of the converter:

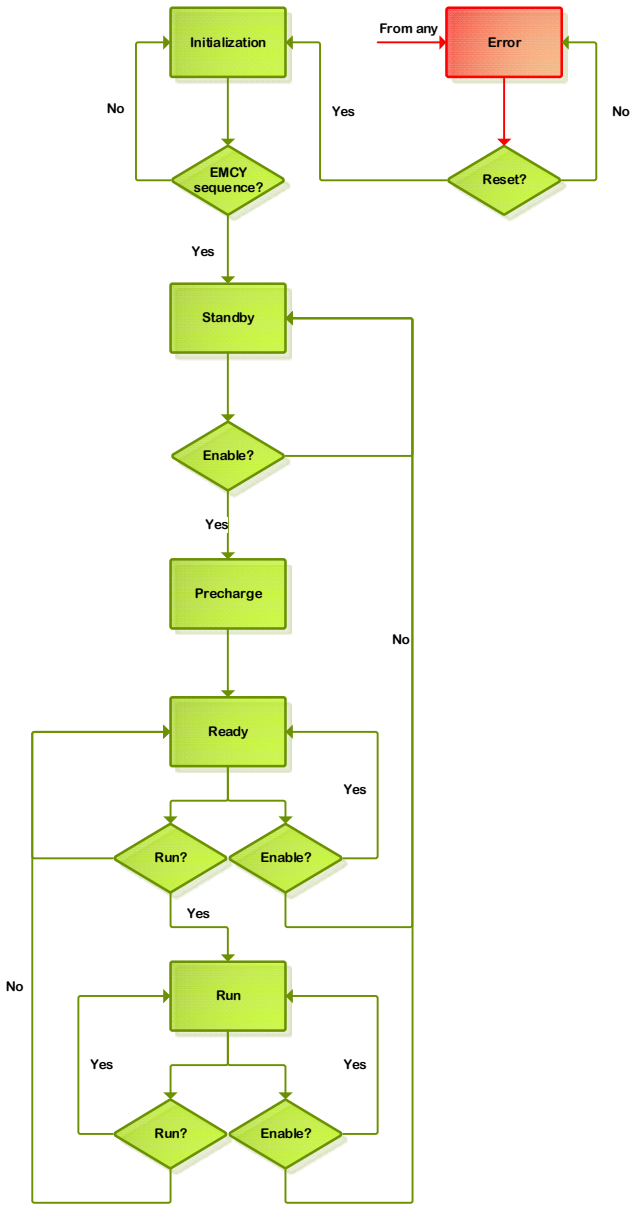

5.2.1. Initialization

During the initialization, the converter control system checks the presence of all internal components and the embedded PC loads the operating system.

No voltage is present at the DC link and the IGBTs PWMs are completely stopped.

The transition from Initialization state brings the converter to the Standby state as long as the emergency stop is deactivated (equipment armed).

5.2.2. Standby

The Standby state keeps the converter in low power mode until an Enable signal is received. While the converter is in standby only the internal power supplies are energized. In particular, this means that there is no voltage in the DC link and no voltage/current is applied to the output of the converter.

The transition from the Standby state is the Enable signal or, in case of errors, a Fault signal. The Enable signal will bring the State Machine to Precharge and eventually to the Ready state. If an error is detected the converter will go into Alarm state.

5.2.3. Precharge

The Precharge is an internal transition state between Standby and Ready. During this state the DC link is gradually charged through resistors until the rated DC link voltage is reached. The transition will finish successfully as long as, in less than 10 seconds of Precharge, the DC link has reached the specified voltage. Otherwise, the next state will be Alarm.

The Precharge state is only applicable to the grid side converter.

5.2.4. Ready

In the Ready state the converter is ready to operate but no PWM signal is sent to IGBTs. The DC link is charged to the rectified voltage and there is no voltage/current applied to the outputs.

The transition from Ready state can be the Run signal, the Not enable signal or, in case of errors, a Fault signal. When a Run signal is received the State Machine will evolve to the Run state. When a Not enable signal is received the State Machine puts the converter on standby, thus discharging the DC link capacitors. If a fault is detected the converter goes to Alarm state.

Only on the Ready state the user can change the operation mode between (CC, CI, CP or CV) in AC mode. In DC mode the operation mode can be change in Run state.

5.2.5. Run

In this state, the converter is completely operational. Due to the converter architecture, the grid side converter (Active Rectifier) will make the transition first while stabilizes the DC link voltage. After that, the three-phase inverter of the EL will measure the actual EUT voltage levels and will synchronize with them. Finally, the inverter will start the control algorithms and PWM.

This state can evolve to Standby state when a Not enable signal is received, to Ready state when a Not run signal is received or to Alarm state if an error condition is detected.

Please, note that, while the EL is in Run state, it is not possible to change the working mode in AC mode. For doing this change the state machine to the corresponding mode.

It is possible to change the operation mode in case of DC mode in Run state.

5.2.6. Alarm

In this state, the converter is stopped and kept in a safe condition: the DC link is discharged and the PWM signals are stopped.

The Alarm state can be reached by any fault detected during the normal operation of the converter, for instance, an emergency stop activation (see *Alarms* chapter for further detail).

The only possible transition from Alarm state is to Initialization state. Once in Alarm state a Reset signal is required from the customer after clearing the fault condition. If the fault condition has not been cleared the converter state will be kept in Alarm (for example, when heatsink overheating has occurred and the temperature is still high).

5.3. Operation modes

The CNG equipment has different operation modes depend on the selected AC or DC mode:

- Constant Current (CC): the output current is controlled to the setpoint value. In this mode, the harmonic content of the current drawn by the equipment is configurable up to 15th (available in AC and DC mode).
- Constant Power (CP): the output active and reactive power are regulated to the given setpoint value (in case of choosing DC Output option, only the active power is regulated) (available in AC and DC mode).
- Constant Impedance (CI): the output impedance is controlled to the setpoint value. The emulator will perform as a constant R, L, C.
- Power amplifier: the output is the same waveform as the analogue input. The converter will control current.

The following figure illustrates how the CINERGIA converter works in all four quadrants. It explains where the equipment behaves as a source and where as a load:

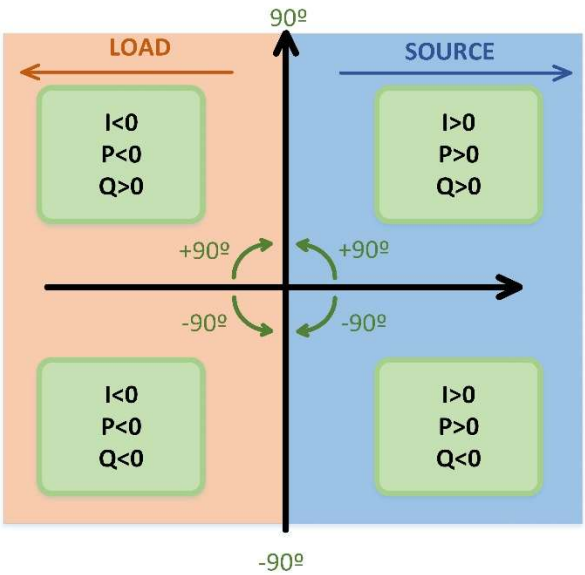

Before operating the equipment, check that all LIMITS from the equipment are correct. Please take care that CNG equipment are bidirectional, this means that the equipment can consume or inject current. The equipment can operate as a source or as a load.

5.3.1. Constant Current (CC)

This mode allows the user to define the current shape for each output.

In CC mode, the user may modify the values of the following parameters as long as they are within the specified range:

Parameter	Allowed range of values
Fundamental harmonic magnitude	Depending on catalogue.
Fundamental harmonic angle	[0°, 360°]

If the user needs the converter to work as a load, press the button LOAD. In this case the setpoint must be with a negative sign. On the other hand, the converter will work as a source with a positive sign.

A setpoint with a ramp higher than 5A/ms will produce over peaks bigger than 10%.

Harmonic control

The maximum set point value can see below:

Setpoint	Range	
Fundamental	0 to 277V	
Harmonics from 3 to 9	-1 to 1	*Percentage from the fundamental (1 means 100%)*
Harmonic 11	-0.5 to 0.5	
Harmonics 13 and 15	-0.2 to 0.2	

It should be noted that the I_{peak} in every phase cannot exceed the maximum permitted value for the equipment (this maximum value varies according to the type of EL used), i.e., when some harmonics are added to the fundamental frequency.

Note that PC software interface calculates the maximum current and the RMS value; and will not send any current command if it exceeds the maximum. The harmonic values can be set with an .csv file or by editing them directly from the PC interface.

5.3.2. Constant Power (CP)

This mode allows the user to define the active and reactive power consumption per output phase.

In CP mode, the user may modify the value of the following parameters, as long as they are within the specified range:

Parameter	Allowed range of values
Active power (P)	[0 , +Maximum permitted S]
Reactive power (Q)	[-Maximum permitted S , +Maximum permitted S]

If the user needs the converter to work as a load, the setpoint must be with a negative sign. On the other hand, the converter will work as a source with a positive sign.

Considering that S is the apparent power, it is important to take into account that the following condition must always be fulfilled:

$$P^2 + Q^2 < S^2$$

If the resultant apparent power reaches the maximum value, the PC software will limit the set points given automatically.

5.3.3. Constant Impedance (CI)

This mode allows the user to define the resistance, inductance and capacitance for each output phase. The passive components are connected in parallel:

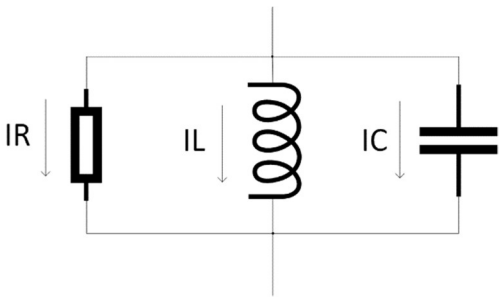

Please note that in DC mode, the impedance is only resistive.

In CI mode, the user may modify the value of the following parameters as long as they are within the allowed range:

Parameter	Allowed range of values
Resistance	1000 – 0.8 Ohm
Inductance	2000 – 0.1 mH
Capacitance	3.7 – 0 mF

The allowed range for each of these parameters depends on the equipment's rated power. In order to calculate the global current, it is necessary to calculate the current for each branch (after calculating the reactance of the capacitor and the inductance):

$$X_L = 2\pi f L \qquad I_R = \frac{V}{R}; \quad I_L = \frac{V}{X_L}; \quad I_C = \frac{V}{X_C}$$

$$X_C = \frac{1}{2\pi f C}$$

Afterwards, global current is calculated using the following formula:

$$\boldsymbol{I} = \sqrt{(\boldsymbol{I_L} - \boldsymbol{I_C})^2 + \boldsymbol{I_R^2}}$$

5.3.4. Independent branch control

Separate mode is optional and it has an additional cost.

Independent branch control allows to control each channel separately choosing the state of each phase.
It is possible to activate this mode using the interface or the LCD touchscreen:

LCD SETTINS MENU

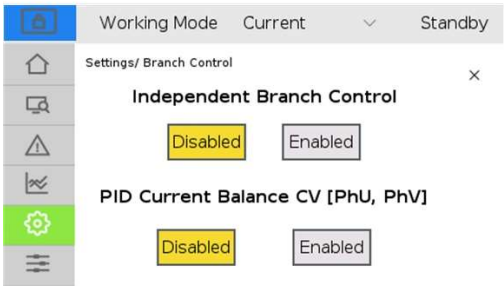

INTERFACE
OPERATIONAL TAB

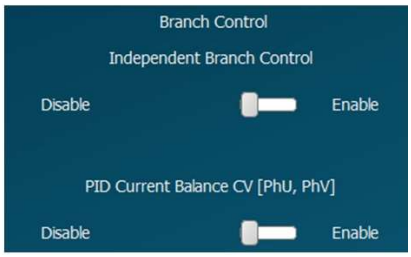

PID Current Balance CV [PhU, PhV] is only used in equipment with DC mode.

The user can decide to activate or not each channel, but the working mode will be the same for each one.

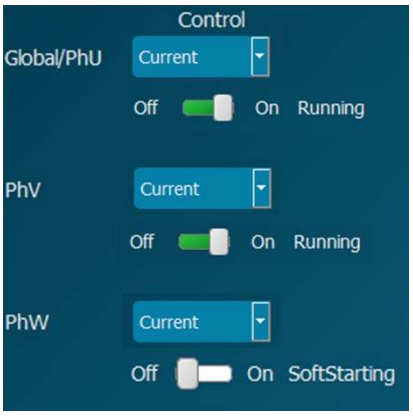

In this example, the first channel and the second one (U and V) are running whereas the W is on soft starting. Three channels must be in the same mode (Current mode in the example).

In Current, Power or Impedance mode, the equipment controls current and it requires a voltage source connected in the output of the Cinergia equipment. The voltage source must be the first to be turned on. Once the Cinergia converter reads the voltage in the inverter, the Run state can be applied.

5.3.5. Power amplifier

The EL converter can work as a current amplifier from the analogue inputs. It means that the waveform in the analogue input will appear in the output of the converter. For instance, if the analogue input is a square waveform, the output of the EL will be a square current waveform. The equivalences of the ranges are shown in the following table:

	MIN	MAX	
Analogue input	-10Vdc	10Vdc	
EL output	-Limit_max_peak_Current	Limit_max_peak_Current	*Depending on the catalogue*

As an extra option, the user can adjust the desired range modifying the Limits AC Min and Max current settings of each phase by the user Interface. The value of Limit_max_peak is calculated based on a CF of 3 with a maximum of 3*Nominal value.

Please note that the converter can only place in the output the values within the accepted working range. However, a maximum CF of 3 is applied calculating the maximum pic current. Hence, an overcurrent alarm is possible in cases where the RMS value exceeds the converter limitations, for instance.

5.4. Connection modes

As it has been previously mentioned, for the EL there are two possible connection modes:

- Independent phases: Three phase power control. Each phase (U,V,W) is controlled independently. The current setpoint can be different in angle and magnitude for each of the three phases.

It must be remembered that the equipment has 3 output phases (U, V and W) which are referenced to the neutral point of the system (N) in AC configuration and to the Negative point of the DC link in DC configuration. Therefore, the EUT must be connected in one of the following configurations: between one of the phases and the neutral point (phase-N), between two phases (phase-phase) or between one phase and the negative in DC configuration. In this way, the power supply could, for instance, be fed by three independent single-phase sources at the same time with different voltages, currents, etc.

Please remember to disconnect the equipment before modifying the connection mode.

Please be sure that no electrical connection between the phases exists. Keep in mind that, if two phases are actually interconnected, a shortcircuit may appear in voltage based modes.

The following diagram details the different operation connection modes:

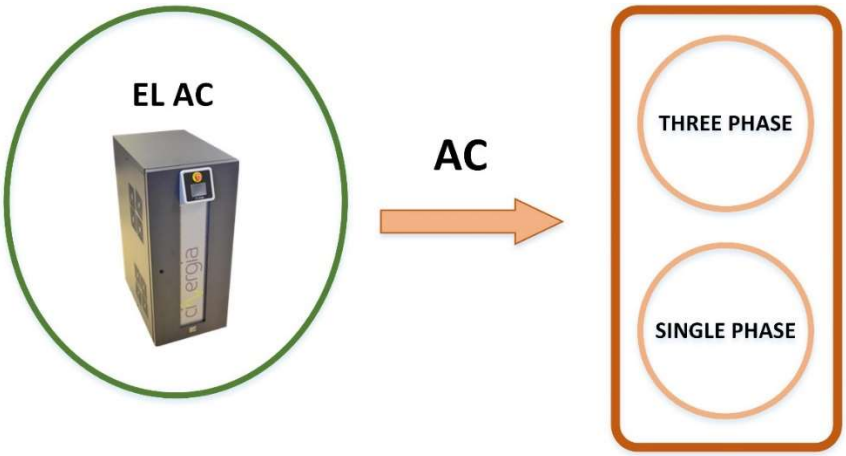

5.4.1. Three-phase mode

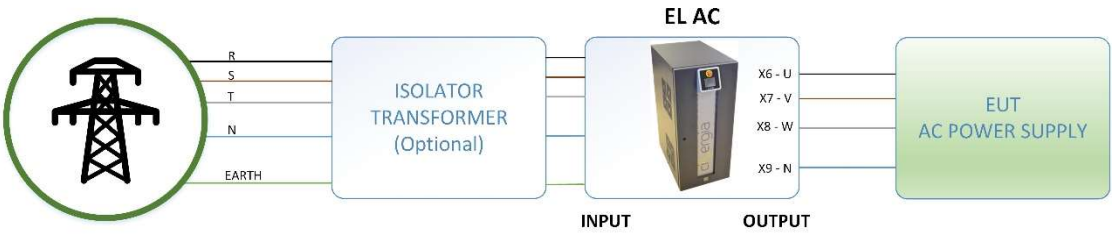

5.4.2. Single-phase mode

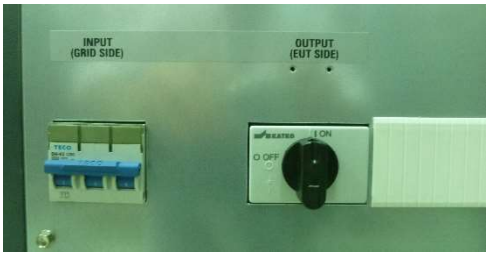

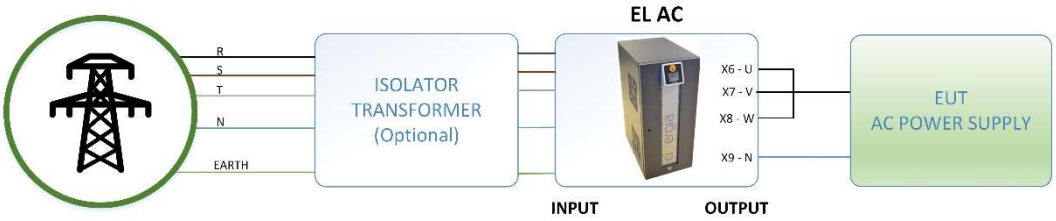

Please note that working with a single-phase grid requires a short circuit between the output terminals in the Cinergia converter. X6, X7 and X8 must be short circuited.

It is possible to change the position of the switches in any state different than *Run*. If the new position is not allowed, there will appear the *Wrong Connection* alarm.

5.5. Working with the equipment

Before powering the cabinet check step by step the following items:

- The converter output (Q2) must be disconnected:

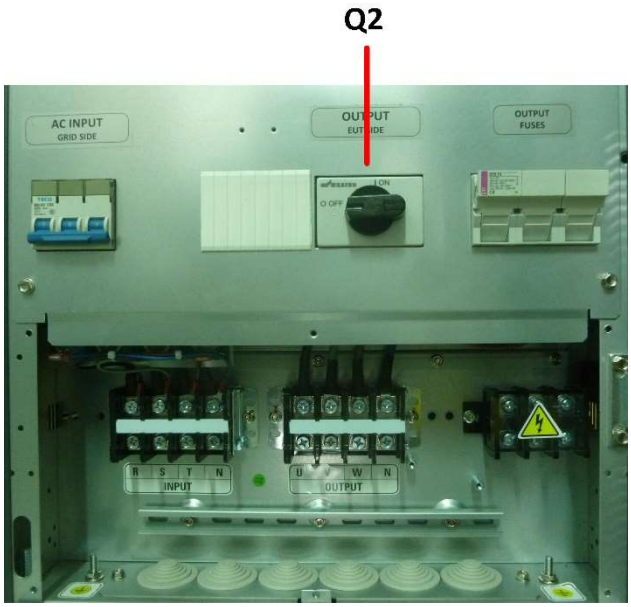

- The grid side of the converter is protected by a thermal-magnetic circuit breaker.
- Be sure that this breaker (Q1) is switched off:

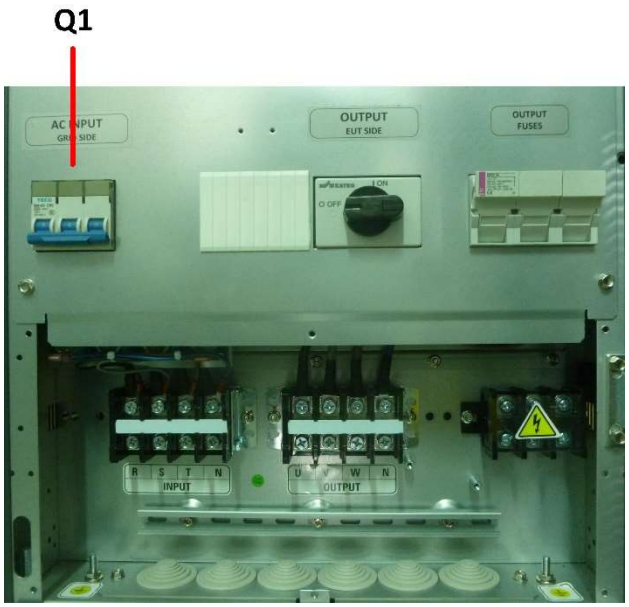

- Check that all wires are connected and secured before proceeding to the converter start-up.

If these steps are validated the converter is ready to be started.

5.5.1. Start-up

Before powering the cabinet wait at least 15 seconds to be sure that the PC embedded inside the equipment starts correctly.

Before operating the equipment, check that all LIMITS from the equipment are correct. Please take care that CNG equipment are bidirectional, this means that the equipment can consume or inject current. The equipment can operate as a source or as a load.

Before running the equipment, please check all the limits and alarms.

Switch on the thermal-magnetic circuit breaker of the grid side of the converter. After switching it on, the converter will initiate the start-up sequence. This sequence will activate the cabinet fans for one second.

At this point the converter will start the initialization process, as described previously. During this time the embedded PC will load the operating system and the communications program. The converter will ignore any command during this process.

The Initialization state can last up to 15 seconds. If every step is completed successfully the converter will move automatically to Standby state.

Summarizing, to put the equipment in Run state the user should follow step by step the next checklist:

1. Connect the mains.
2. Turn on the thermal-magnetic circuit breaker.
3. Activate the cabinet output by switching the disconnector.
4. Deactivate the emergency stop (pull out the button). (*Initialization* → *Standby*).
5. Send the Enable signal. (*Standby* → *Precharge* → *Ready*).
6. Select the connection mode between Independent or Parallel phases. This option cannot be done while the converter is running.
7. Select the operation mode. Please keep in mind that not all EUTs are compatible with all operation modes. For example, if the converter is acting like a current source, do not connect any other current sources at the output. In AC mode, the connection mode cannot be changed during Run operation. In DC mode, the connection mode can be changed during Run.
8. Send the Run signal. (*Ready* → *Run*).

Please keep in mind that not all EUTs are compatible with all operation modes. If the converter is operated as a current source, please do not connect any other current sources at the output.

When the equipment is turned off, the user must wait at least 15 seconds before turn it on again.

5.5.2. Stop

Once the equipment is running (Run state) it may be stopped in three ways:

5.5.2.1. Full stop

This type of stop is recommended if the electrical connections are to be modified or the converter will be stopped for a long time.

When the converter is running, special care must be taken. It is strongly recommended to follow the next steps:

1. Send the Not enable signal to the converter (*Run → Ready →Standby*).
2. Press the emergency stop button (*Standby →Alarm*).
3. Disconnect the output disconnector.
4. **Wait at least 60 seconds** (time to get discharged the internal DC link capacitors).
5. Disconnect the input thermal-magnetic circuit breaker.

Before manipulating the cables in the cabinet terminals, please check the voltages with a voltmeter to assure no voltage is present. The grid cable and the EUT must be completely unpowered before connecting or disconnecting the cables. The user must be sure that the input and output switches are both in OFF position.

Before powering the cabinet wait at least 15 seconds to be sure that the PC embedded inside the equipment starts correctly.

5.5.2.2. Standby stop

This type of stop is recommended if the converter will be stopped during some hours. The DC link is discharged and therefore aging of the DC bus capacitors is prevented.

Send the Not enable signal to the converter. If the user wants to lock the converter in order to avoid an accidental start-up, press the emergency stop button, and keep it pressed.

For restarting operation, release the emergency stop button and send the Reset signal. After doing this, proceed as a standard start-up sending the Enable signal.

NEVER connect or disconnect the cables while the converter is in this state.

5.5.2.3. Ready

This type of stop is recommended if the converter will be stopped for a short time. The DC link is kept charged and the converter is ready to run.

When the converter is running, the user may send the Not run signal at any time. This will stop the IGBT PWM signals but all internal parts will be kept powered. To restart operation, send the Run signal.

NEVER connect or disconnect the cables while the converter is in this state.

5.5.3. Emergency stop

The emergency stop button may be pressed at any time bringing the converter to the Alarm state. The emergency stop shall be only used when an emergency is detected. Please, avoid to stop the equipment with the emergency button as a “normal practice” since it will contribute to premature component aging. To lock the converter and bring it to the Alarm state, follow the Full stop procedure.

The emergency stop unpowers all the electromechanical devices in the cabinet so the converter is stopped by hardware assuring a full stop. The internal contactors will be open so no power will be present at the DC link or at the output of the converter. Only the control boards, the embedded PC and the local touchscreen remain powered.

5.5.4. Accidental shut down

When the converter is suddenly disconnected from the mains special care must be taken for restarting it. When the converter is shut down with a charged DC link, some thermal protections of the internal power supplies will prevent its start-up.

When an accidental shutdown happens disconnect the mains and wait for at least 2 minutes for powering the cabinet again.

When an accidental shutdown happens disconnect the mains and wait for at least 2 minutes for powering the cabinet again.

5.5.5. Alarms

There are different sources of alarm in the converter. The following table describes them and offers possible causes and solutions to the user.

Code	Name	Cause	Solution
0	Watchdog	Internal microcontroller error.	If this alarm persists and is the only alarm triggered, contact Cinergia's technical support.
1	Emergency sequence	The emergency stop button is activated or the EPO wire is no longer connected.	Unpress the emergency stop button or reconnect the EPO wire.
2	Drivers	IGBTs saturation protection has been activated. This alarm is triggered when there is a sudden overcurrent in the power supply output.	Contact Cinergia for technical support if this alarm persists. Check the equipment under test before restarting the power supply.
3	Alarm precharge	Internal alarm caused by a shortcircuit. It may also be triggered if there is not enough time between the EPO release and the enable signal.	Repeat the Enable action 5 seconds after the EPO release. Contact Cinergia for technical support if this alarm persists.
4	Overvoltage in the DC link	The DC link voltage has exceeded its maximum value.	Reduce the output step transition time. Contact Cinergia for technical support if this alarm persists.
5	Undervoltage in the DC link	Undervoltage in the DC link caused by a fast output transient.	Reduce the output step transition time. Contact Cinergia for technical support if this alarm persists.
6	AC overvoltage	The voltage in the emulated grid is too high. Also in DC indicates overvoltage.	Check the emulated grid voltage. It can be triggered due to connection/disconnection load transition.
7	AC undervoltage	The voltage in the emulated grid is too low. Also in DC indicates undervoltage.	Check the emulated grid voltage. It can be triggered due to connection/disconnection load transition.
8	AC/DC overcurrent	The output current has exceeded the configured limitation.	Check the output load.
9	AC overcurrent Peak	The output current has exceeded the configured limitation (peak value).	Check the output load.
10	Heatsink temperature ABR or INV	Overtemperature in the heatsink of ABR or INV.	Check if there is enough space between the power supply and the wall. There is insufficient air flow inside the power supply. Check if the fans are working correctly.
11	Room temperature	Overtemperature in the room	Check that room temperature does not exceed 50ºC.
12	ABR/INV Alarmed	One of the two control boards has an alarm.	Reset alarms
13	SD Error	SD in Control Board is damaged.	Reset the equipment. Contact Cinergia for technical support if this alarm persists.

14	Heart Beat	Communications cable is broken or there is a control board without response.	Contact Cinergia in order to isolate the problem.
15	Mains lost	There has been an interruption in the mains.	Check the mains and the grid impedance
16	Device Not Inicialized	One of the control card has not inicialized.	Reset the equipment. Contact Cinergia for technical support if this alarm persists.
17	Isolation	The isolation detector detects less than 10kOhm between any phases and ground	Check the output and input electrical connections. Check the EUT to isolator faults.
18	AC Overload	The output power exceeds 150% during 60s or 120% during 10 minutes.	Reduce de EUT power. Note that the equipment has an internal protection against consecutive overload test.
19	Connection mode/Wrong Connection	The output connection is not correct. Some switch has been switched during the converter operation or in a forbidden connection.	Do not operate the independent/parallel switch while the converter is running
20	Output Overvoltage	The Output voltage has exceeded its maximum value.	Check the equipment under test voltage.
21	Output Overvoltage Peak	The Output voltage has exceeded its maximum value (peak value).	Check the equipment under test voltage.
22	Output Undervoltage	The Output voltage has exceeded its minimum value.	Check the equipment under test voltage.
23	Output Overcurrent	The output current has exceeded the configured limitation.	Check the output load. Note that the equipment has an internal protection against consecutive overload test.
24	Output Overcurrent Peak	The output current has exceeded the configured limitation (peak value).	Check the output load.
25	Failed synchronization	The equipment has a synchronization failure. It means that there is an issue at the output side of the equipment (for example, there is NO grid in case EL_AC).	Check the output source.
26	Phase U	Indicates that the phase U is in alarm. Check the alarm.	Check the alarm and how to proceed.
27	Phase V	Indicates that the phase U is in alarm. Check the alarm.	Check the alarm and how to proceed.
28	Phase W	Indicates that the phase U is in alarm. Check the alarm.	Check the alarm and how to proceed.

5.5.6. Alarms reset

The user shall follow the next steps for resetting the alarms:

1. Send a Reset signal to the converter.
2. Send a Not enable and Not run signals (note: this step is done automatically when the user is interfacing the converter by the LCD or by the software provided by Cinergia).
3. Proceed as a standard start-up process by deactivating the emergency stop (pull out the button).

A Reset will be performed only in the case that the alarm source has been cleared. If the problem persists after resetting the converter, a new alarm will be triggered.

6. LOCAL TOUCHSCREEN CONTROL PANEL

The equipment of Cinergia has the possibility to be controlled with the local touchscreen situated in the front panel of the equipment, which also delivers the necessary information of the status of the converter. The following list illustrates the basic functionalities of the touchscreen:

- Information about the status of the converter (initialization, ready, standby, run, Precharge or alarm).
- Information about the connection and configuration (independent/parallel, unipolar/bipolar and AC/DC).
- Information of the input and output voltage, current and power.
- Operate with the equipment by changing the status.
- Send setpoints and configure limits and ramps.
- Create plots.
- Change the IP of the equipment.
- Configure the analogue and output.

When the LCD touchscreen is not in use during a certain among of minutes, there will appear a screen saver which can be disabled by touching the screen anywhere. The following images show two different moment of the screen saver:

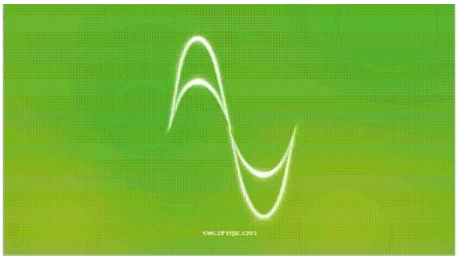

6.1. DISTRIBUTION OF THE TOUCHSCREEN

To create a friendly navigation of the LCD, Cinergia has designed a tab distribution ubicated in the right of the screen. There is also an upper bar, which has the purpose to inform and modify the control operation and mode as well as the status of the equipment.

All these tabs are described in the following points.

6.2. Upper bar

The following diagram details the top bar of the touchscreen, which is always visible and operative.

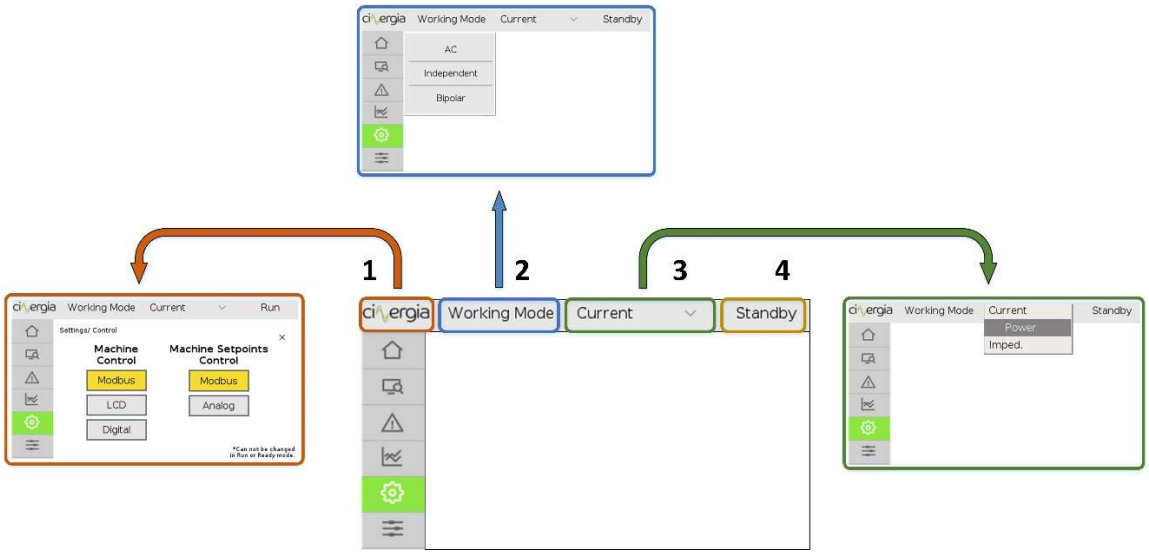

By means of the bar in the upper side of the touchscreen, the user is constantly aware and can modify the following variables by pressing the touchscreen:

- **Control of the equipment.** The local touchscreen will go to the settings options where the user can decide which is the control of the equipment (Modbus, LCD or Digital)
- **Working connection mode.** Information about the mode (AC/DC, Independent/Parallel and Unipolar/Bipolar)
- **Control mode.** The user can modify the control of the equipment (Voltage, Current, Power or Impedance). Current, Power and Impedance control is only available in DC mode.
- **State of the power supply.** Information about the state (Initialization, Standby, Precharge, Ready, Run or Alarm). When the equipment is in alarm, there will appear a red sign.

The rest of information can be found throughout the lateral tabs.

6.3. Keyboard

There are different menus and submenus in the LCD touchscreen that requires to introduce numbers. All them are introduced using a standard keyboard which is the same for all screens. It is the following:

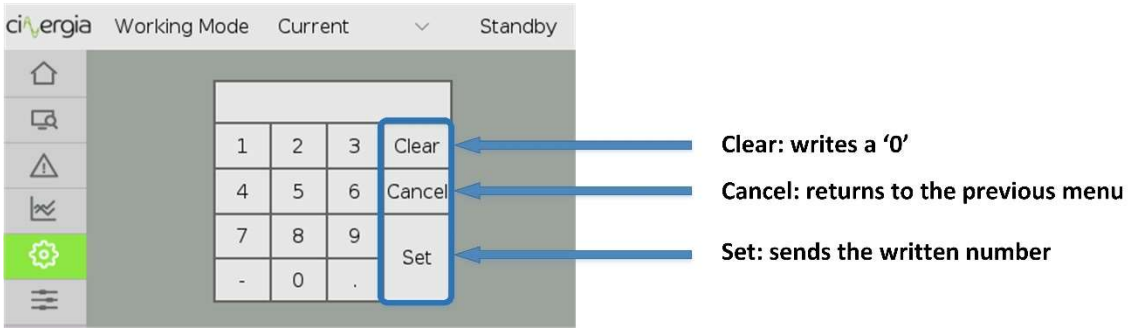

The use of the keyboard is very simple: introduce the number normally. It can be written in positive, negative and with decimals depending on which is the introducing parameter. For example, if the user is changing the IP address, the number cannot be negative or with decimals, but if the introduced number is a current setpoint, the number can be positive, negative and with decimals.

It does not matter if the negative key is pressed at the beginning or at the end of writing the number.

However, there are 3 important keys to describe:

a. *Clear*. Writes a '0' if the user needs to reintroduce the number because of any mistake.
b. *Cancel*. Return to the previous menu without sending any number to the equipment. For example, if the user requires to send a limit, by touching this key the screen will go to the limits menu without sending any limit.
c. *Set*. It sends the number to the equipment and returns to the previous menu.

6.4. LCD tabs distribution

As it is mentioned before, the touchscreen is distributed in tabs located in the left of the LCD.

There are six main menus: Supervision, SCADA, Alarms, Plots, Settings and the Operation Panel. A description of each one can be found in the following points.

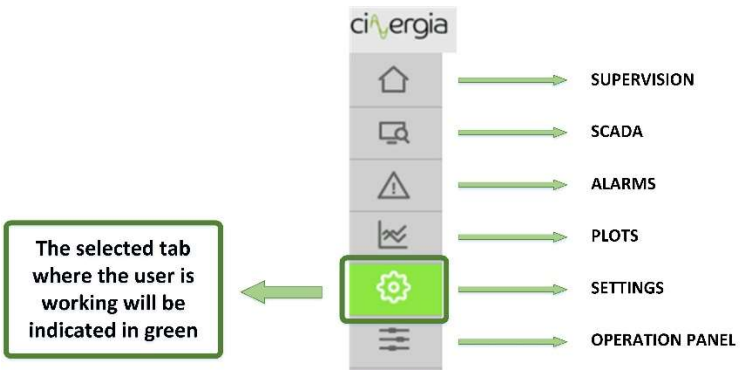

6.4.1. Supervision

Information tab. It shows the main variables of the inverter: voltage, current and power. You can choose between bars or table visualization.

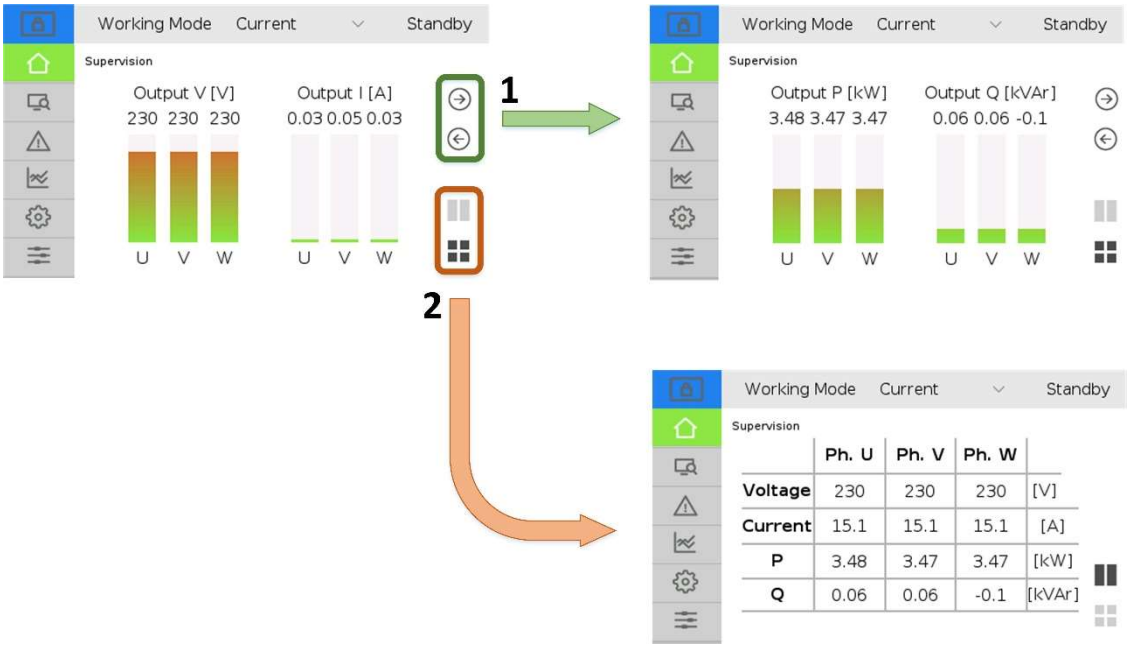

1. Bar visualization. Change screens using left and right arrows to see voltage and current or power. The bars will be filled depending on the scale fund of the equipment.
2. Table visualization. Using these two buttons, the user can change between bars or table visualization. The table allows to have a general overview of all the parameters of the equipment in only one screen.

6.4.2. Scada

The Scada window is exclusively informative. It shows the main variables of the inverter. The following schematic points the parts of the window and these points are described below.

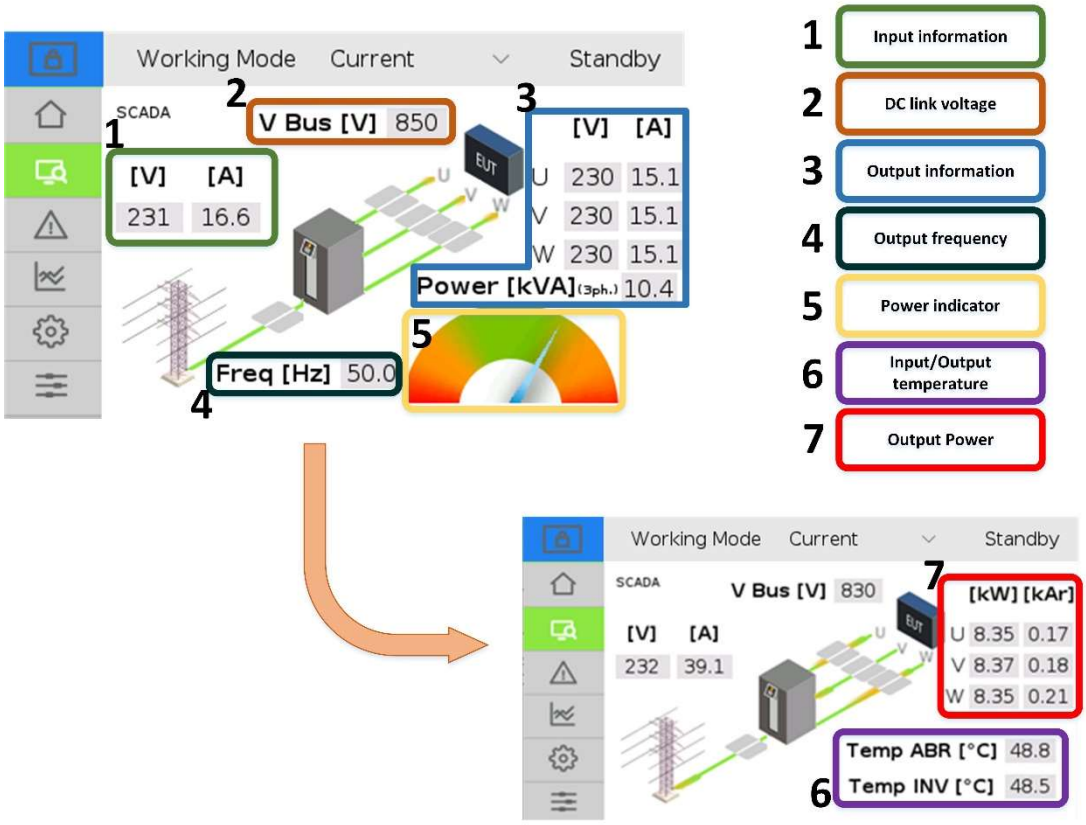

1. Input voltage and current. The input voltage of the converter is the three-phase line voltage whereas the current is the global current flowing in or out the converter. Remember that the Cinergia equipment is a regenerative supply, so it can work as a source (delivering current to the EUT side) or as a load (absorbing current from the EUT side).
2. Voltage in the DC link (bus) of the converter. When the equipment is in *Ready* state, the bus will be around 600V and it will be around 800V while being in *Run* state. Otherwise it will be decreasing following the discharge curve of the capacitors until it reaches 0V.
3. Output (EUT) voltage, current and power. This part of the tab shows the voltage and current of each channel and the global power (the addition of all phases).
4. Frequency in the output (EUT) side. If the Cinergia equipment is an AC voltage source, the output frequency will be chosen within the specified allowed range (10 to 400Hz) whereas if the equipment is an AC current source, the frequency will be read from the AC voltage source connected in the EUT side.
5. Power diagram. This indicator displays the total output power of the converter. It will move to the right or to the left depending on the behavior of the equipment (load or source).

By touching any part of the Scada screen it will appear information about the power and temperature. To return to the other visualization, touch the screen again in any part of the Scada tab.

6. Input and output temperature of the converter. If the temperature (input or output) reaches the limit there will appear the alarm *Heatsink Temperature*.
7. EUT side power (active and reactive) per channel.

The image in the middle of the Scada tab details the working state of the equipment per phase using a drawing:

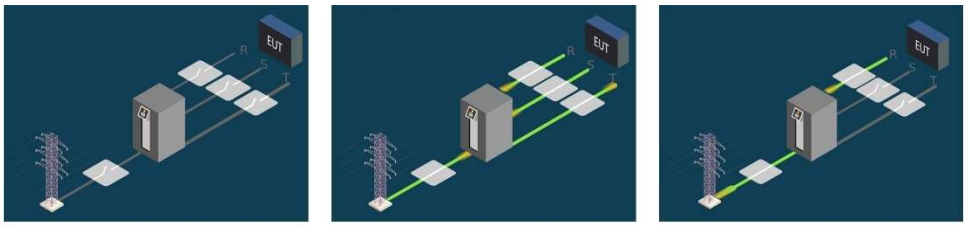

EQUIPMENT NOT RUNNING | EQUIPMENT WITH ALL 3 PHASES RUNNING | EQUIPMENT WITH U PHASE RUNNING (only with separate mode)

6.4.3. Alarms

The Alarms window displays information about the power supply alarms. Any existing alarm will appear in this window.

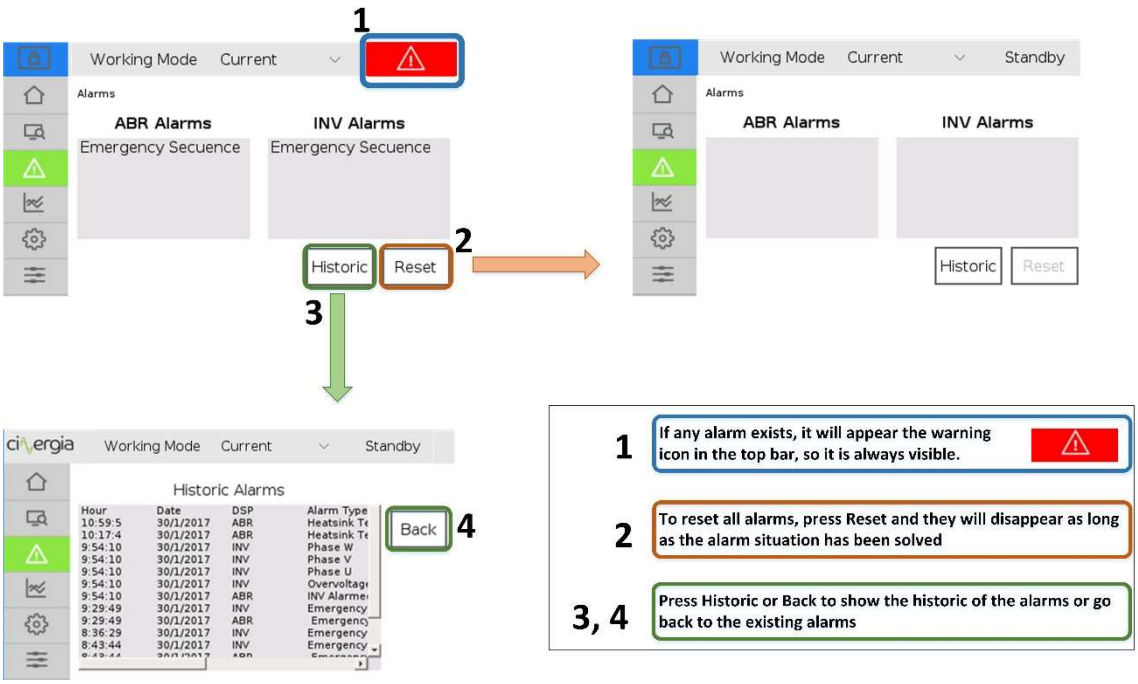

1. If any alarm occurs, the red symbol of emergency will appear on the right-top of the LCD touchscreen.
2. To reset the alarms and continue working with the equipment, press the *Reset* button. The alarm state will disappear as long as the alarm situation has been solved and the screen of alarms will be cleaned.
3. It is also possible to see the historic of alarms, which will show all the alarms from the first time that the equipment is turned on. Press the *Historic* button to visualize all the alarms.
4. Press *Back* to return to the alarms main menu again.

The equipment cannot work meanwhile it is in the alarm state.

6.4.4. Plots

The LCD touchscreen can generate plots of the voltages, currents and powers of each phase. Follow the steps described below to create them.

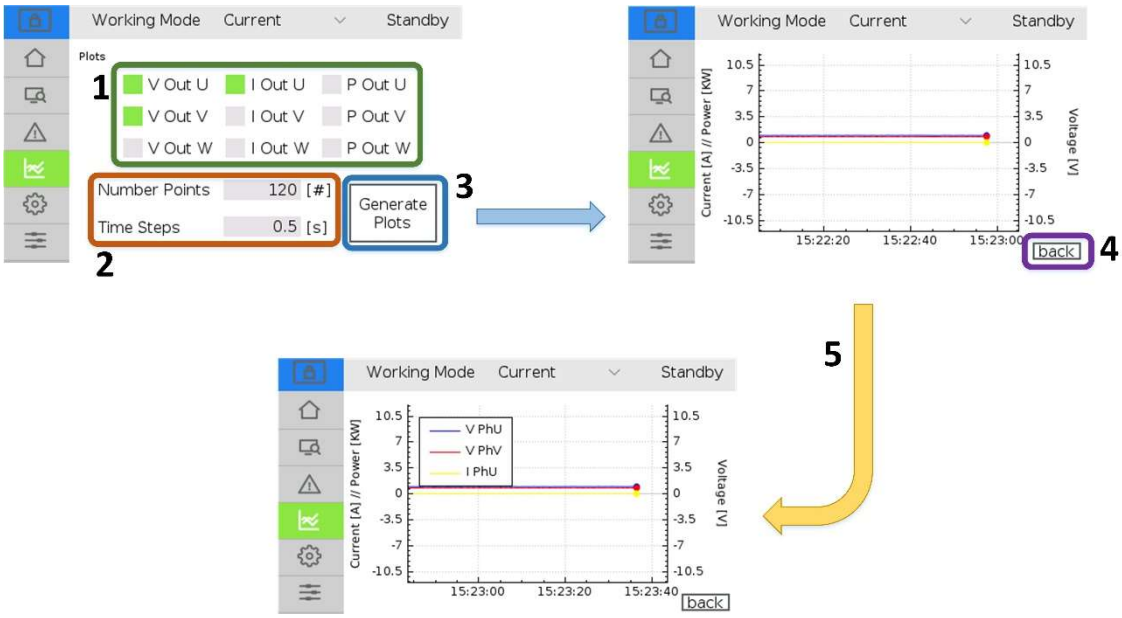

1. Select the items you want to be in the plot. The available parameters are output voltage, current and power for each phase. The selected items are illuminated in green. To deselect them, press the left square again and they will be not illuminated anymore.
2. The plot will get the value of the selected items in **1** every time indicated in *Time Steps*. The *Number of Points* are the points that will appear of the same item in all the horizontal axis. For example, if the *Number of Points* is 120 and the *Time Steps* is 0.5s (default values), the plot will get values of the selected items in **1** every 0.5s and the horizontal axis will show 120 · 0.5 = 60s of points.
3. Once the items are selected and the numbers in point **2** are ready, press *Generate Plots*. The horizontal axis is for the time whereas the verticals ones are for the current and power (left) and voltage (right).
4. Press *back* to return to the plots menu.
5. By pressing anywhere in the generated plot, it will appear the legends with the colors and the items being created in the graph. Pressing the plot again, the graph legends will disappear.

6.4.5. Settings

In this tab, the user will be able to introduce all the configurations and parameters of the equipment. The following schematic describes the available functions of this tab:

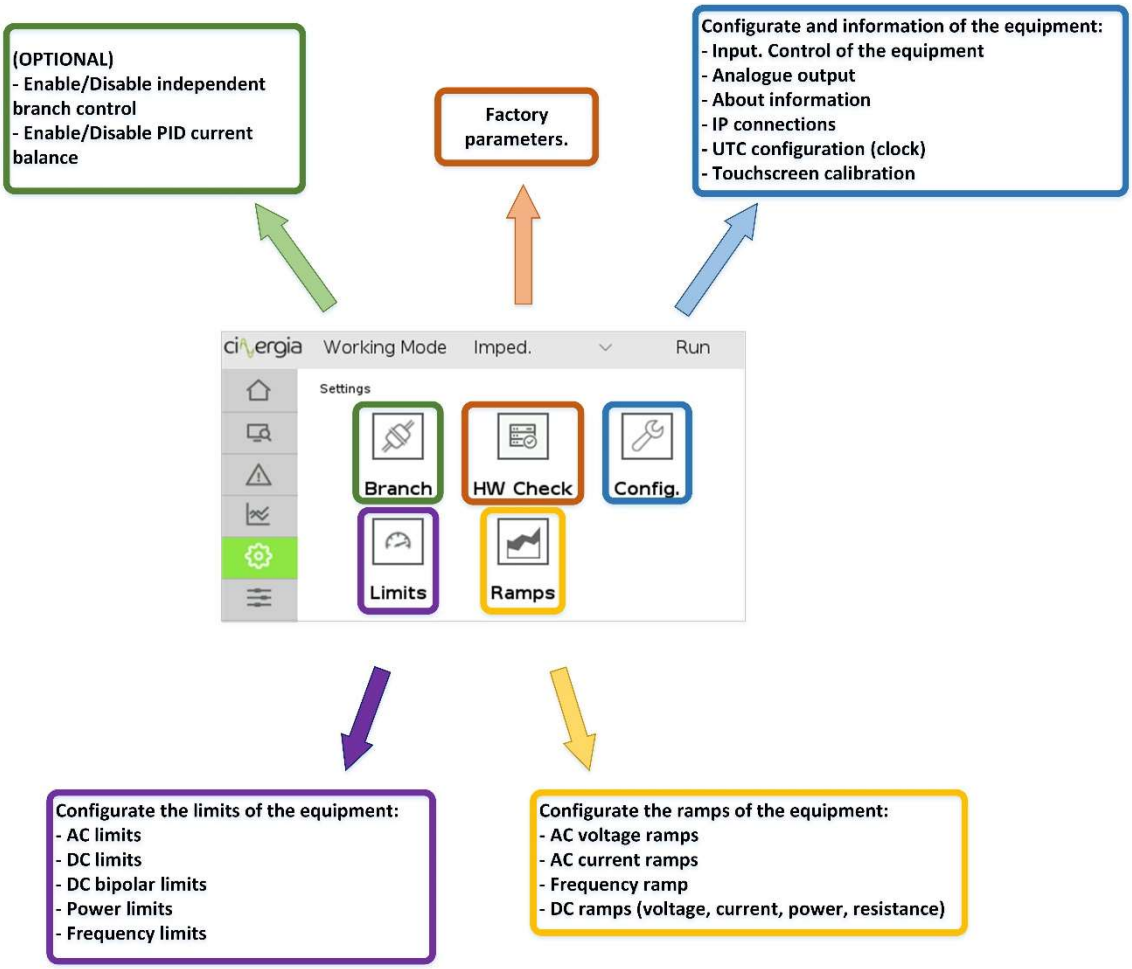

In the following points, each part of this *Settings* tab is described.

I. Branch

It is important to notice that the independent branch control is an extra for the equipment and it has an additional cost.

The function of independent branch allows to work with each channel of the equipment independently. It means, for example, that phase U can be in voltage mode and V and W in current mode, which can be very useful because the same Cinergia equipment can work as a voltage and current source at the same time.

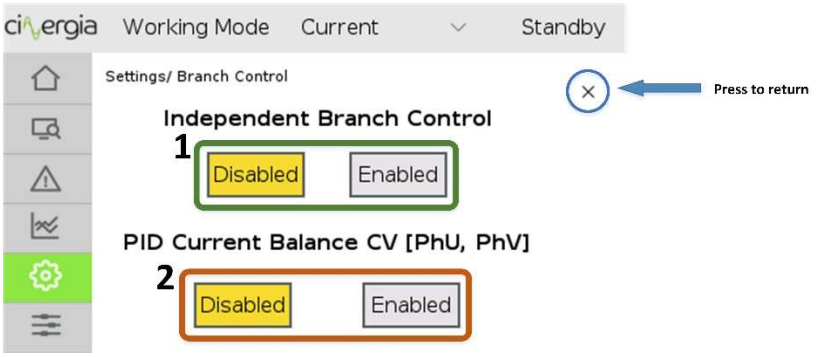

1. Enable and disable the independent branch control. The selected mode is illuminated in yellow.
2. There is the possibility to work with the phases U and V both in voltage mode. To do so, a software PID can be activated with this button to get a balance in the current flowing in both voltage source channels.

II. HW Check

For now, this is an internal option of Cinergia and is in development process to be available for the user as soon as possible.

III. Config.

In this tab, the user can introduce the general and specific parameters into the equipment:

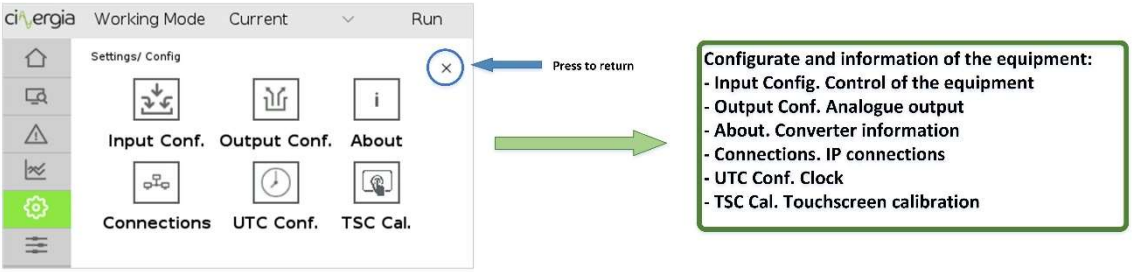

Each submenu is described below:

a. *Input Conf.*

The input configuration allows to choose the control of the equipment. It is separated with two parts: the machine control and the setpoints control. The machine control are the signals which makes the converter to be in the different states such as enable, run, ready… whereas the setpoints control sends to the equipment the value of the setpoint.

The selected option will be illuminated in yellow.

The following schematic explains the different ways to send these signals:

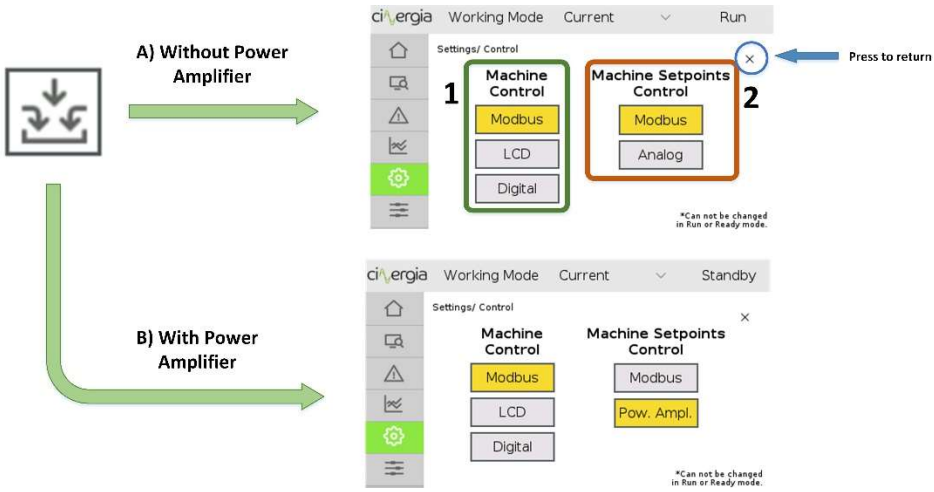

It is important to notice that the Power Amplifier control is an extra for the equipment and it has an additional cost.

A) Without Power Amplifier. It is separated the *Machine Control* and the *Machine Setpoints Control*. As it is explained before, the first one (**1**) allows the user to control the equipment status. This control can be done through these different possibilities:

a. *Modbus*. Send the control signals via the interface delivered by Cinergia.
b. *LCD*. Control the equipment state using the LCD touchscreen. Using this option, a blue lock will appear on the top left of the touchscreen. It means that the converter will only follow the instructions of the LCD even though the interface tries to control it.

c. *Digital.* This option allows to control the converter using the digitals signals gathered in the **X17** DB15 connector in the front panel connections which its pinout is the following:

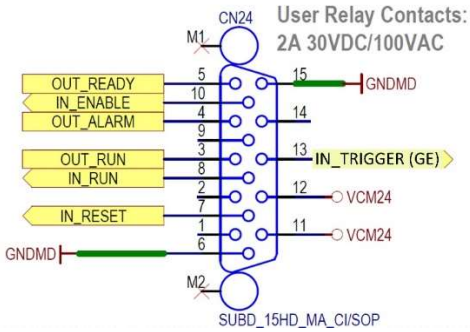

The converter will follow the instructions coming from the selected option. While there is a selected control, the other two controls are not available.

The *Machine Setpoints Control* (**2**) is separated in two options:

a. *Modbus.* The setpoints are sent using the interface delivered by Cinergia.
b. *Analog.* The setpoints are sent using the DB15 connector gathered in **X15**.

B) With Power Amplifier. It is almost the same as the option without power amplifier, but the setpoints can be sent via *Modbus* and *Power Amplifier*. This last option is explained in the manual of the equipment and it means that the user can introduce the desired waveform in the **X15** connector and it will appear in the output.

b. *Output Conf.*

This window allows the user to set the analogue outputs. Each channel has 2 analogue outputs (for example, output **U** has analogue outputs **U1** and **U2**) and each output can be configured as

Voltage, *Current*, *Power*, *Power Reactive* (only AC) or *Frequency* (only AC). These analogue outputs will be gathered in the **X15** DB15 connector in the front panel, which its pinout is the following:

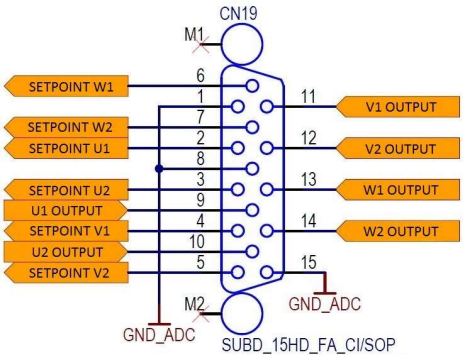

Once the user goes in the *Output Conf* menu will be able to select and configure the 6 analogue outputs (**U1**, **U2**, **V1**, **V2**, **W1** and **W2**). By pressing one of them, another screen will appear with the available options depending on the kind of equipment:

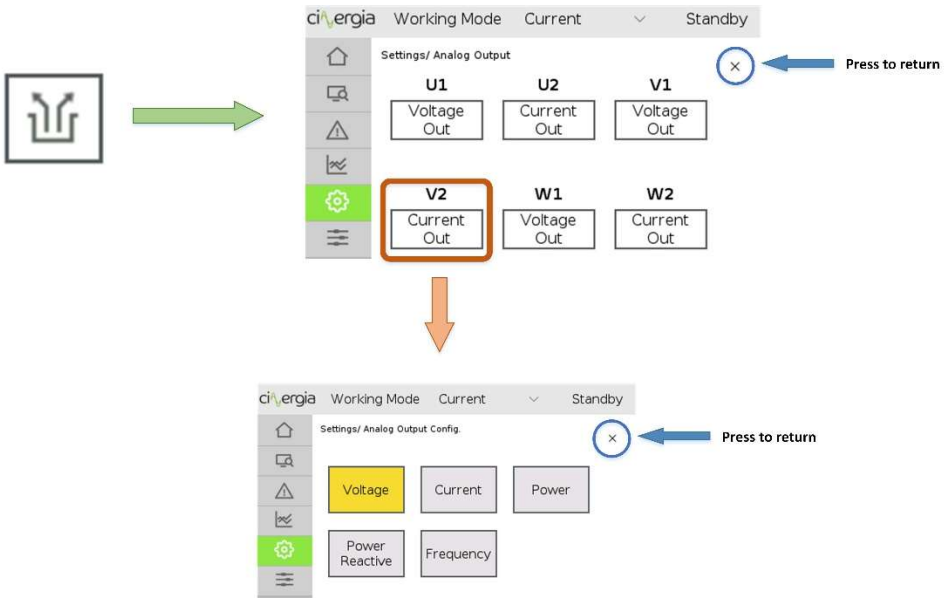

The selected analogue output will be illuminated in yellow.

c. *About*

It shows the basic information of the converter. It contains the address and the webpage of Cinergia as well as the device information. The user can consult it by touching the arrows on the right of the screen.

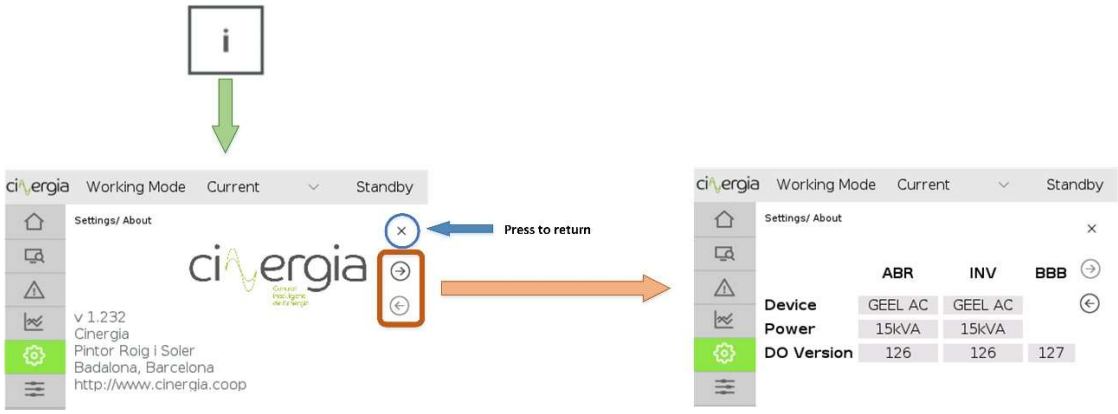

d. *Connections*

This is the menu where the user can visualize all the connections parameters.

To know more about these parameters, please read the document *Connecting Cinergia units to PC*.

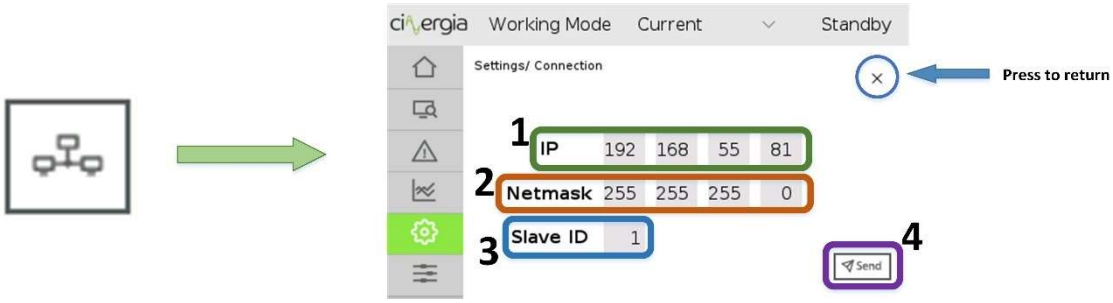

To change the values of the following parameter, touch the number and the LCD will go to the keyboard explained in the chapter *3.2. Keyboard* of this manual.

1. *IP*. There are four parts to be filled and they depend on the required or desired net where the converter will be connected. To change the IP, touch on each window with numbers.
2. *Netmask*. Configure the Netmask according with the PC netmask.
3. *Slave ID*. If the connection of the Cinergia equipment is not in serial (RS485 or RS232), this parameter is not important because the Modbus is based in a point-to-point communication. When the equipment is using a serial communication, set this parameter according to the other equipment in the same net.
4. *Send*. Once all the parameters are ready, press this button and they will be send to the converter.

When the user changes the IP of the equipment, it will go to alarm state (*Heartbeat* alarm). If the interface is running with the old IP, it will be disconnected and to reconnect it will be necessary to use the new introduced IP. Local touchscreen will turn on automatically after maximum 2 minutes.

e. *UTC Conf.*

This menu allows to configure the clock zone where the equipment is working. It is used for the *Historic* of the alarms and the horizontal axis of the plots in the LCD and the PC interface.

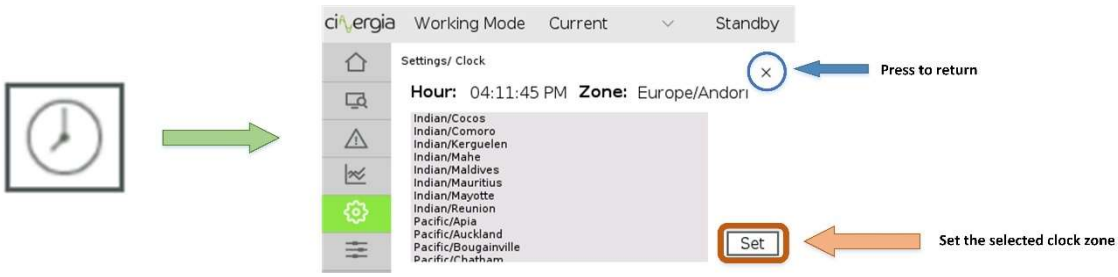

Move the finger up and down in the window to find the desired time zone and press it when it is found. Afterwards select it and press *Set*. It will be changed automatically.

f. *TSC Cal.*

(TouchScreen Calibration). Select this option to calibrate the touchscreen. To do so, follow the instructions that appear in the LCD. It is only necessary to touch the four red crosses that will appear:

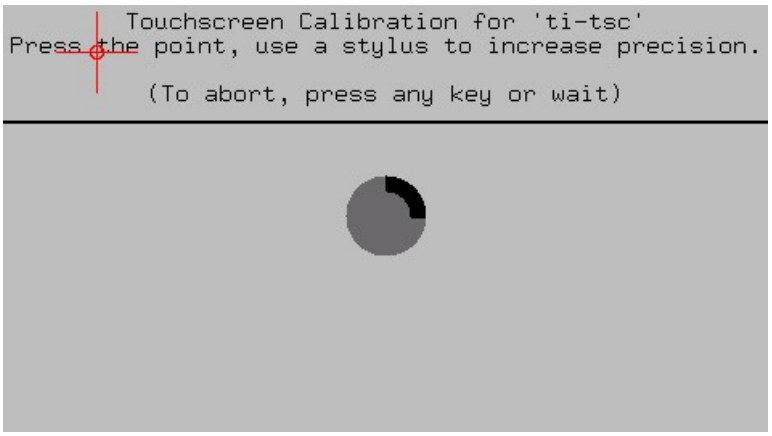

Once the four red crosses are touched, the touchscreen will go back to the previous menu (Settings/config).

IV. Limits

The user can define the limits of the equipment in this menu. The converter has its own factory limits, but it is possible to introduce new ones.

The condition for these new limits is that they must be lower (in case of maximum limits) or higher (in case of minimum limits) than the factory ones, otherwise the equipment will introduce the factory limits.

The LCD touchscreen will freeze or unfreeze (illuminate) the available parts where the user can introduce the parameters depending on the equipment (AC or DC, voltage source or current source and parallel or independent connection)

Each limit window is practically the same, the main difference are the values to introduce. For example, bipolar limits will not have *Global* values to introduce because it cannot be in parallel mode. Or, another example, frequency limits are for all the phases so it does not make differences between each channel. The following image details one of these window with the buttons to navigate in it.

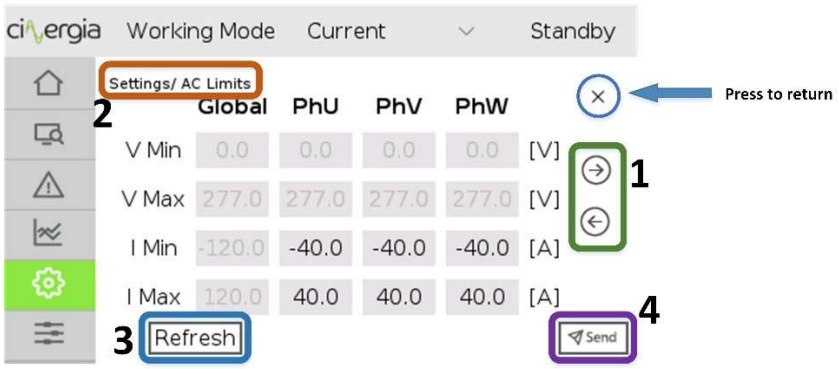

1. Change the limit window with the left and right arrows.
2. The actual window is indicated so that the user can see which are the limits to introduce. For example, this image above is for the *AC Limits*, and the equipment is in current

mode, so the available limits to introduce are the current ones while the voltage values are frozen and the user cannot touch them.
To change the values, touch the number and the keyboard explained in the chapter *3.2. Keyboard* will appear.

3. *Refresh* button is used for show which are the limits in the equipment. It is useful to touch this button when the user sets new limits in the converter to see if the new values have been correctly introduced.
4. Press *Send* when all the values are ready in the window.

V. Ramps

The ramps control the softer or faster change of the setpoints to avoid peaks or possible damages in the equipment under test. The ramps are not always necessary. The equipment has default ramps, but they can be changed in this window or in the interface.

The available ramps to change are the followings:

- AC voltage (magnitude and phase angle)
- AC current (magnitude and phase angle)
- Frequency (only AC)
- DC (voltage, current, power and resistance)

It is represented in the following diagram:

The LCD touchscreen will freeze or unfreeze (illuminate) the available parts where the user can introduce the parameters depending on the equipment (AC or DC and voltage source or current source)

Each ramp window is practically the same, the main difference are the values to introduce. For example, in AC there are differences between each channel whereas in DC, each ramp is for all three channels at the same time. The interface allows to configure the three channels with different values each one. Frequency ramp is also for all three channels at the same time. The following image details one of these window with the buttons to navigate in it.

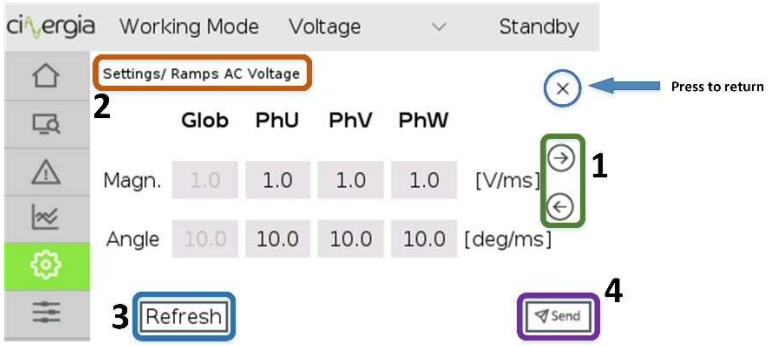

1. Change the ramp window with the left and right arrows.
2. The actual window is indicated so that the user can see which are the ramps to introduce. For example, this image above is for the *AC Voltage Ramps*, and the equipment is in voltage mode, so the values can be changed and the windows are illuminated. However, the equipment is not in parallel mode, so the *Global* values are frozen and the user cannot touch them.
   To change the values, touch the number and the keyboard explained in the chapter *3.2. Keyboard* will appear.
3. *Refresh* button is used for show which are the ramps in the equipment. It is useful to touch this button when the user sets new ramps in the converter to see if the new values have been correctly introduced.
4. Press *Send* when all the values are ready in the window.

A setpoint with a ramp higher than 5A/ms will produce over peaks bigger than 10%.

6.4.6. Operational Panel

It is possible to view the voltages and the currents in the output of the converter at any time by pressing the left-down button.

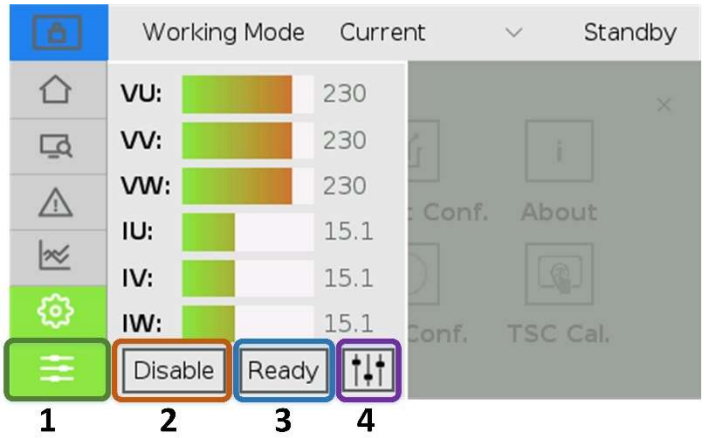

1. By touching this button, the LCD will show a supervision window without being important the actual tab. To return to the previous (or another) tab, press the desired tab in the left.

Control the equipment with the following buttons:

2. *Enable* and *Disable* the converter.
3. Set the converter into *Ready* or *Run* state.
4. Send the desired setpoints to the equipment. Depending on the kind of the equipment, the available setpoints will be different. For example, a voltage source will not be able to send current setpoints and a current source will not be able to send frequency setpoints. The LCD touchscreen will make available the setpoints to be send. The following image details how to send a setpoint:

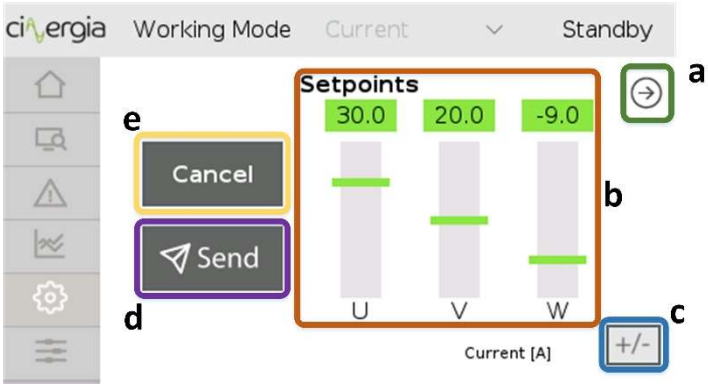

a. Change the setpoint window to find the desired setpoint to change.

b. The setpoints will appear with bars and can be modified by touching this bar until it reaches the desired value or can also be modified touching the number above the bar. It will go to the keyboard explained in the chapter *3.2. Keyboard*.
c. To change the sign of the setpoint press this button. If it is positive will change into negative and the other way around.
d. Once all the values are ready, press this *Send* button

The equipment needs to be in *Run* state to send the setpoints, otherwise the values will not be sent.

If the user needs the converter to work as a load, the setpoint must be with a negative sign. On the other hand, the converter will work as a source with a positive sign.

e. By pressing *Cancel*, the LCD will go to the last tab where the user was without sending any setpoint value.

7. DIGITAL CONTROL

The Cinergia converter can be controlled using Digital Inputs and Outputs.

PIN	INPUT/OUTPUT	NAME	FUNCTION
2	Output	OUTPUT LED READY	*Turns on when the equipment is in READY and blinks when the equipment is doing the precharge*
3	Output	OUTPUT LED RUN	*Turns on when the equipment is in RUN*
4	Output	OUTPUT LED ALARM	*Turns on when the equipment is in ALARM*
5	Input	INPUT RESET	*Makes a reset to the equipment*
6	Input	INPUT RUN/READY	*Changes from RUN to READY and vice versa*
8	Input	INPUT ENABLE/DISABLE	*Changes from ENABLE to DISABLE and vice versa*
9	Input	INPUT TRIGGER (GE)	*Only available in GE. Allows the start of a fault*

To control the CNG converter through the digital I/O it is necessary to activate the digital mode via LCD (see on LCD input configuration chapter). While digital control is activated is activated, remote control and LCD control is not possible. The Control Mode can only be changed in the Standby and Alarm State through LCD touchscreen.

Digital outputs can supply up to 8mA maximum.

For more information, please go to chapter 4.4.8 and 4.4.9 of this manual.

8. REMOTE COMMUNICATIONS

CINERGIA's power converters can be operated and supervised remotely through an Ethernet communications bus. An internal embedded PC, with CINERGIA's proprietary software, allows the exchange of information between the internal CAN bus and the external Modbus TCP/IP (Ethernet). In this way, the customer can build specific HMI client software application while CINERGIA's power converter acts as a Modbus TCP/IP server.

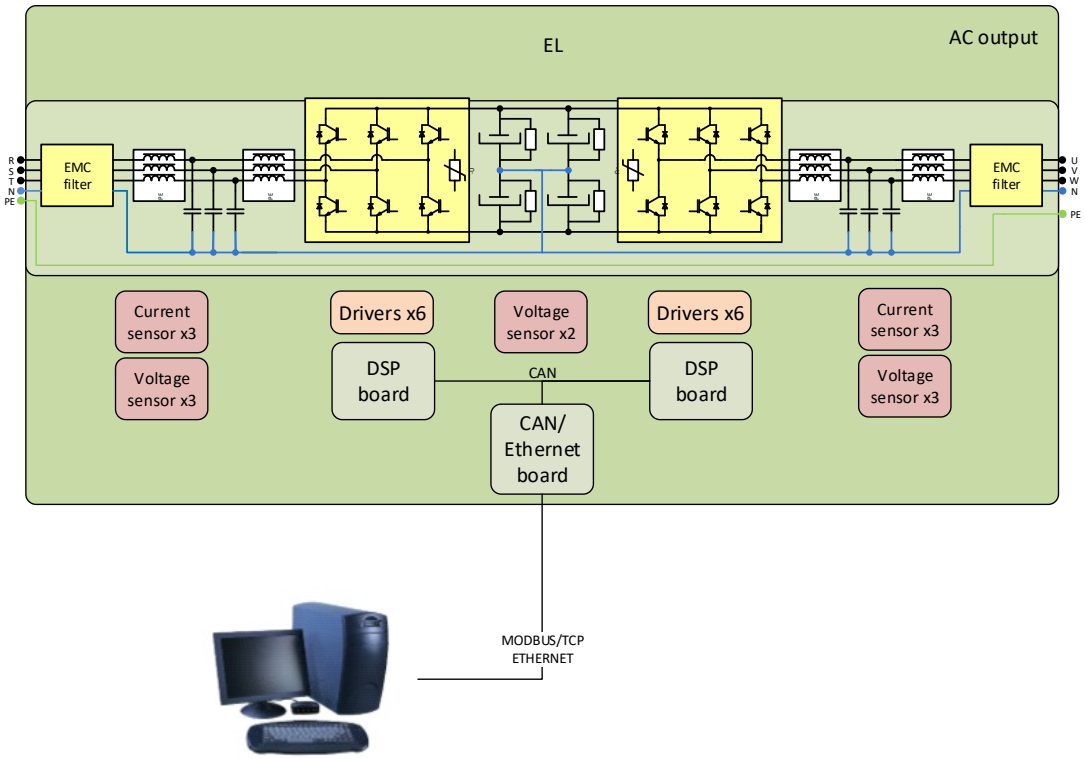

This Modbus TCP slave has the following properties:

Property	Implementation
Function Codes:	0x03: READ_HOLDING_REGISTER 0x10: WRITE_MULTIPLE_REGISTER
Server port:	502 (decimal)
Modbus node ID:	10 (decimal)
CRC	Not used. Relayed on the TCP stack.
Multiple connections	Only one master at one time allowed. Additional connection requests might be delayed or even rejected.
Idle connections	Idle connections might be closed by the slave. Anyway, the listen socket will force the master to keep the connection active, even when there is no active connection at all.
Other	All variables are 32-bit length. This is 2 Modbus base register addresses. And so all Read operations must begin at the beginning of one variable, and be Even. For Write operations, ONLY 2 REGISTER WRITE OPERATIONS ARE ALLOWED, i.e. only one variable (32 bits long) at one time.

It is important to read the document *Modbus Data Table*.

9. HUMAN MACHINE INTERFACE

CINERGIA delivers, within the scope of the supply, a Human Machine Interface software that communicates with the equipment using MODBUS protocol. This application is compatible on Windows 10/Windows 7/Windows XP. The software can be installed by executing Setup.exe file in Administrator Mode and following the instructions of the application.

To connect Cinergia units to a PC, follow these steps:

- Connect a standard RJ45 Ethernet cable to terminal X13. The unit can be connected directly either to a computer or to a router (wired or wireless). If the CINERGIA unit is connected through a router, several computers could be connected to the unit at the same time.
- Check the IP address of CINERGIA unit in the LCD Touchscreen pressing the button "About".
- Check the computer's Ethernet configuration panel and make sure that both the computer and the CINERGIA unit are in the same subnetwork. For instance, if the CINERGIA unit IP address is 192.168.55.237 the computer Ethernet configuration shall be:
    a) Computer IP address: 192.168.55.XXX (XXX can be any address different from 237 and different from any other device in the same network)
    b) Subnet mask: 255.255.255.0
    c) Gateway and DNS configuration are not needed for a connection with a CINERGIA unit
- Run the graphical user interface delivered by CINERGIA, write the IP address of the unit to be connected and press the Connect button.

If there is an error when trying to run CINERGIA application please check the compatibility mode of your computer. For instance in a Windows 7 computer, right click CINERGIA application → Properties; go to Compatibility panel and check the box Run this program in compatibility mode; and select the operating system of your computer.

Read the document "Connecting CINERGIA units to a PC v2" for more information.

The interface delivered by Cinergia has a correct visualization with screens configured with a minimal resolution of 1366x768 (16:9)

9.1. SHOW OPERATIONAL BUTTON

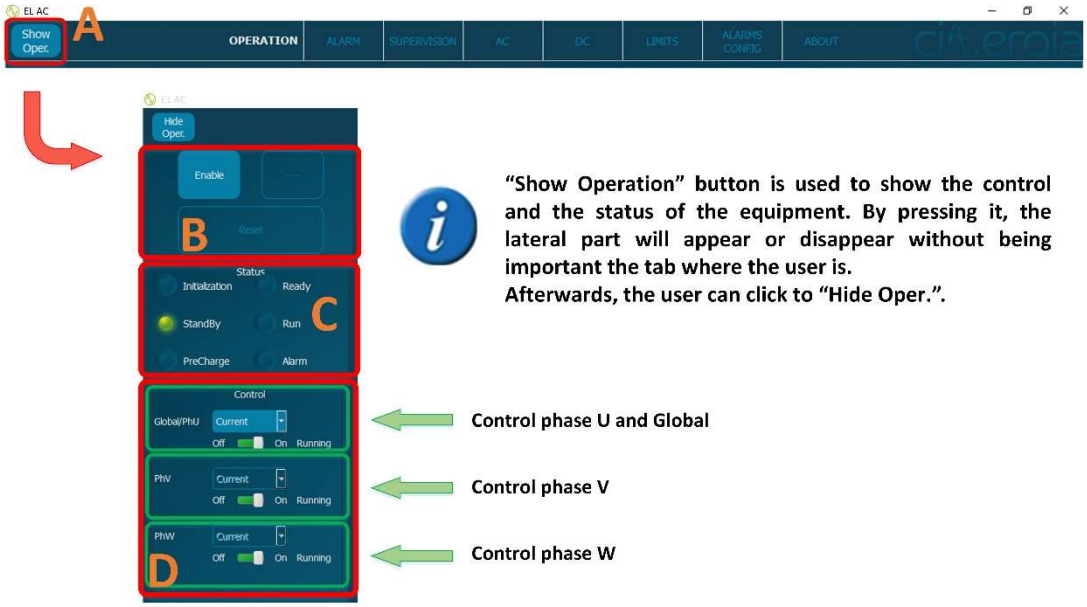

- **A:** "Show Slide" button. It allows the user to see the lateral part of the interface with the control and the status of the converter. It is useful to have a wider view of every tab of the interface.
- **B:** Control the status of the equipment with the buttons:
  - Enable / Disable. *Enable* button turns the equipment into Ready state. *Disable* button turns the equipment into Standby state.
  - Run / Ready. *Run* button turns the equipment into Run state. *Ready* button turns the equipment into Ready state.
  - Reset. *Reset* button turns the equipment into Standby state.

Before going to Run state, please be sure that all the connections between the EUT and the Cinergia equipment are ready.

- **C:** Information about of Active Rectifier and Inverter status:
  - Initialization. The converter control system checks the presence of all internal components and the embedded PC loads the operating system.
  - Standby. Keeps the converter in low power mode until an Enable signal is received. There is no voltage in the DC link and no voltage/current is applied to the output of the converter.
  - Precharge. Internal transition state between Standby and Ready. During this state the DC link is gradually charged through resistors until the rated DC link voltage is reached.

- Ready. The converter is ready to operate but no PWM signal is sent to IGBTs. The DC link is charged to the rectified voltage and there is no voltage/current applied to the outputs.
- Run. The converter is completely operational: the inverter starts the control algorithms and PWM. Setpoints can be sent.
- Alarm. The converter has an alarm and the user can visualize it in the *Alarm* tab.

Button	State transitions
Enable	Standby → Ready
Disable	Ready/Run → Standby
Run	Ready → Run
Ready	Run → Ready
Reset	Alarm → Initialization → Standby

- **D:** Choose the control mode (Voltage, Current, Power or Impedance mode). The converter can change the control mode in any state.
  - In AC, the GE allows voltage control.
  - In DC , the GE allows voltage, current, power and impedance control.

The channels can work unified (run all phases in the same run button) or separate (run each phase with a separate run button).

- Unified: once the equipment is in run state, the user can control all three phases by activating them using the slider *Off/On* in the Global part. When the slider is in *On* position, the IGBTs start commuting.
- Separate: once the equipment is in run state, the user can control the phases one by one by activating them with their own slider shown in the picture above.

To select the mode unified or separate, please read the chapter "1.2. Operation" part D.

Separate mode is optional and it has an additional cost.

In Current, Power or Impedance mode, the equipment controls current and it requires a voltage source connected in the output of the Cinergia equipment. The voltage source must be the first to be turned on. Once the Cinergia converter reads the voltage in the inverter, the Run state can be applied.

9.2. DISTRIBUTION OF THE INTERFACE

To create a friendly navigation of the interface, Cinergia has designed a Tab Dialog distribution, in which each tab has one of the following purposes:

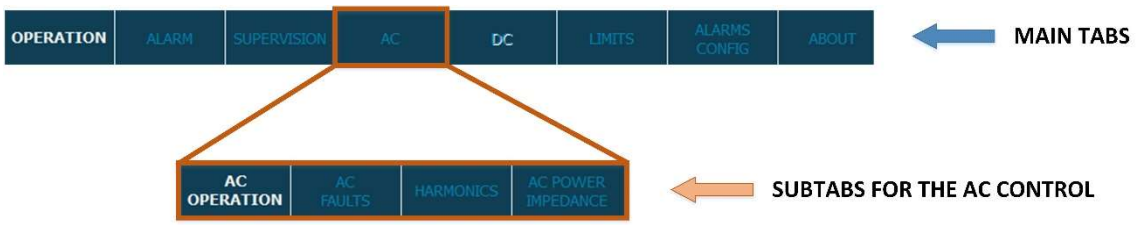

Further information of each kind of tab can be found in the following sections.

If there is any discrepancy between this document and the manual, the information of the present document will prevail.

9.2.1. Operation

- **A:** Connection mode. Informs about the connection:
  - AC Independent Bipolar

The connection mode can only be modified by changing the switches in the front panel. Please read the document Operation Modes for more information.

- **B:** Informs about which is the equipment's state control:
  - <u>LCD:</u> control from LCD screen.
  - <u>Modbus:</u> control using Modbus Ethernet (IP) or serial port.
  - <u>Digital:</u> control with digital/analogue control.

The selection of the control mode is set throw the LCD touchscreen (please see figure below)

- **C:** Informs about which is the equipment's setpoint control:
  - Modbus: the setpoint is sent via Modbus (interface)
  - Analogue / Power Amplifier: the setpoint is sent with an analogue signal. There is also the possibility to us the converter as a power amplifier (optional).

The following figure explains how to change the control mode throw the LCD touchscreen.

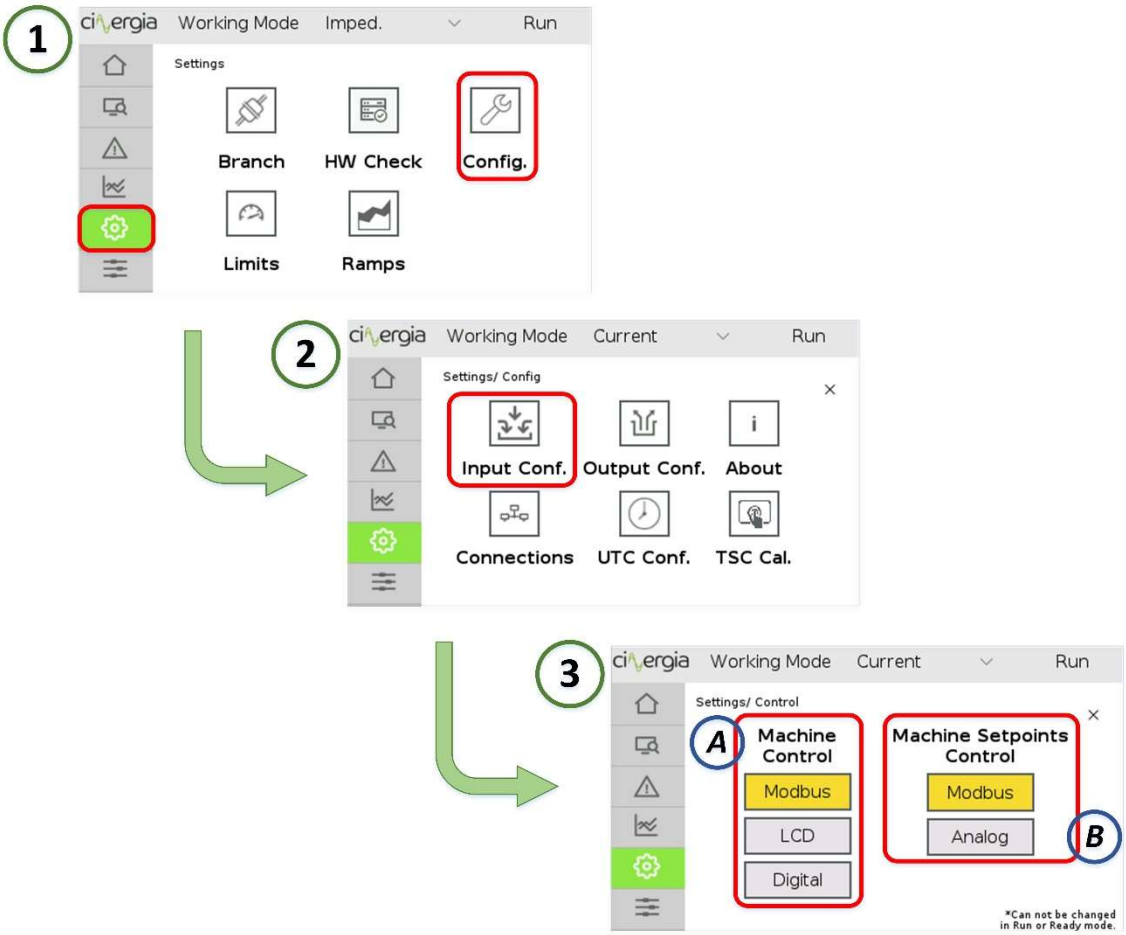

Follow the steps **1**, **2** and **3** of the above picture to reach the LCD touchscreen submenu that enables the configuration of the *Machine Control* and *Setpoints Control*. Once the user is in the third step, **A** part is for the *Machine Control* (*Enable*, *Disable*, *Run*, *Ready* and *Reset*) and **B** part is for the setpoints (the equipment will send the setpoints only in Run state).

Please note that the machine state and the setpoints control are independent.

It is not possible to change the control when the equipment is in *RUN* state.

- **D:** Branch control (Optional). The converter can work with all three channels together using the same *Run* button or work with each phase independently.
  - Unified: the phases are activated together with the button explained in the chapter 1.1. part B.

- Separated (Optional): each channel is activated with the buttons explained in the chapter 1.1. part D.
  This separated mode allows the user to work with only one phase without being necessary to activate the others.

If the equipment is working with separated branches, the user can activate a PID control between the phases U and V which balances the current passing through them.

- **E:** Connection settings. The converter can be connected to the interface using the following methods:
  - Modbus TCP. Uses Modbus protocol and the port 502. Connect a RJ45 ethernet cable to the terminal X15.
  - TCP Socket. Uses an internal Cinergia protocol and the port 8989. Connect a RJ45 ethernet cable to the terminal X15.
  - Modbus Serial Port. Uses RS485 or RS232 protocol. Connect a DB9 cable to the terminal X11.

Both *Modbus TCP* and *TCP Socket* can be connected via router or direct to the computer. *Modbus Serial Port* must be connected directly to the computer. For more information please read the document *Connecting CINERGIA units to a PC*.

Once the configuration is selected, press *Connect*.

- **F:** graphical state of the converter. The figure indicates whereas the equipment is running (and which phase) or not.

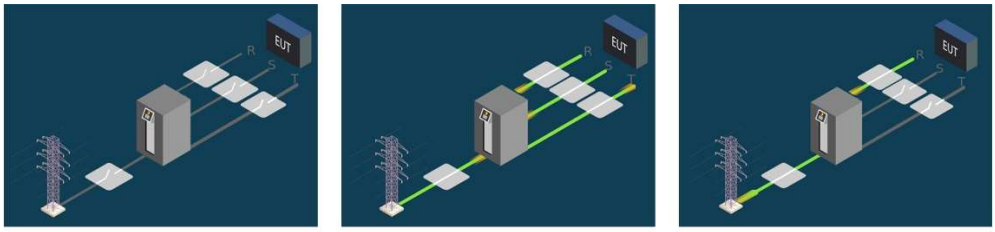

EQUIPMENT NOT RUNNING | EQUIPMENT WITH ALL 3 PHASES RUNNING | EQUIPMENT WITH U PHASE RUNNING (only with separate mode)

9.2.2. Alarm

In this tab, the alarms of each converter (active rectifier and inverter) are shown. When there is an alarm, the light turns into red.

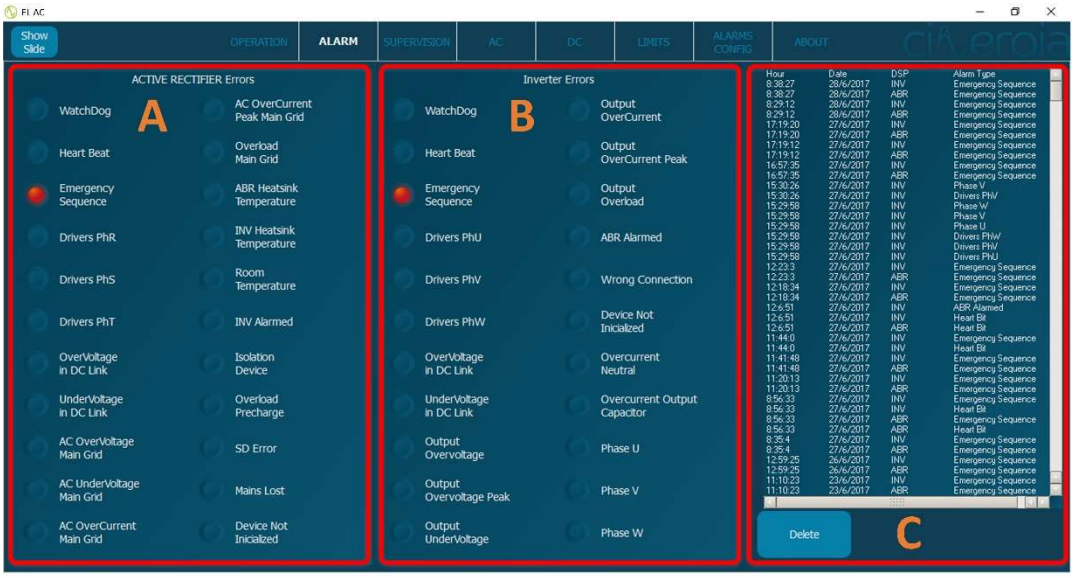

- **A:** Active Rectifier alarms.
- **B:** Inverter alarms.
- **C:** Alarms history. It can be deleted using the password.

To reset the equipment, press the *Reset* button using the *Show Slide* button:

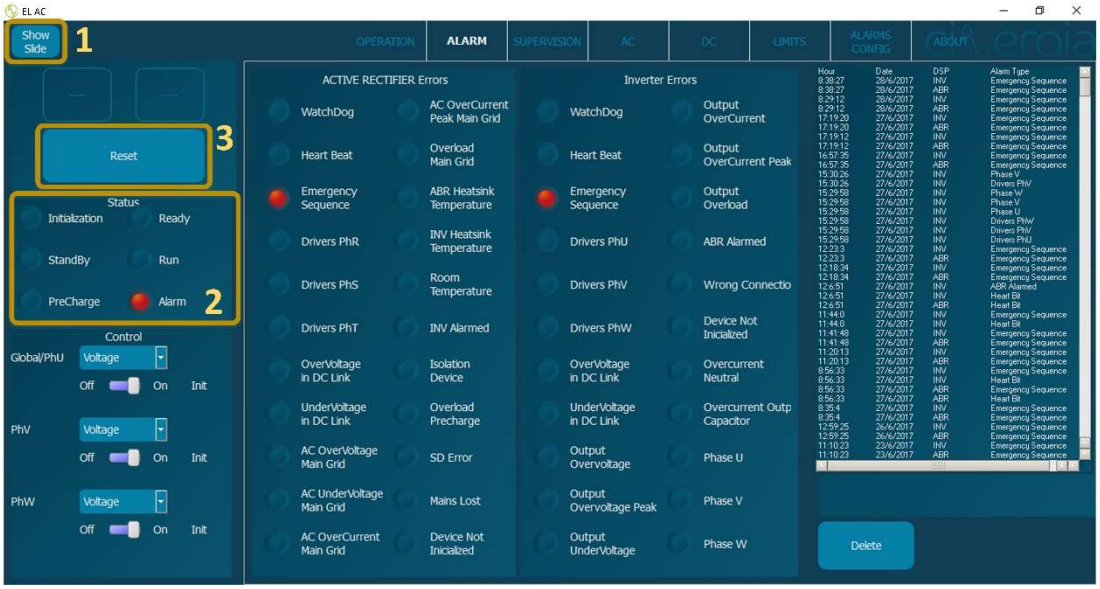

1. Press *Show Slide* to see the status of the equipment and the reset button.

2. When the equipment has any alarm, it is reflected in the status.

3. Press *Reset* to reach the standby state (no alarms).

9.2.3. Supervision

The supervision is an informative tab is where the user is able can see all the values of the converter.

- **A:** Information about the parameters of the input (grid side):
  - Voltage
  - Current
  - Active power
  - Reactive power
  - Frequency
  - Temperature
  - Voltage DC link
- **B:** Information about the parameters of the output (EUT side):
  - Voltage
  - Current
  - Active power
  - Reactive power
  - Frequency
  - Temperature
- **C:** Current trend plots:
  - It displays 3 variables per graph. The first one is for voltage, the second one for current and the third for power. Due to a long refreshing time, it is not possible to detect fast current transients of the variables.
    1. The user can set the maximum and the minimum for the vertical axes or can use the Auto Scale, which will adjust the graph with the maximum and minimum displayed at the current time. This configuration is able for all three graphs.
    2. The number of points are all the points that will be displayed in the graphs. If the number is high the time is going to be longer whereas it is going to be

displayed a short period of time with a low number of points. This value is common for all 3 graphs.

9.2.4. AC

This tab contains all the subtabs concerning the AC mode: *AC Operation*, *AC Faults*, *Harmonics* and *AC Power Impedance*.

Remember that the *Show Slide* button is available in all the tabs. It is useful to hide the control operation of the converter to have a wider view of the working tab.

I. AC Operation

This subtab allows the user to send all the AC parameters to control the Cinergia converter in AC mode: current setpoints, harmonics, phase angles and ramps. It is also possible to define the converter as a load or as a source.

The 2 buttons *Load* and *Source* described in the following chapter is used only for helping the user to understand whereas the equipment is delivering or injecting current. It can be important, for example, if the EUT connected in the output only allows one kind of current (injected or delivered). These buttons do not make changes in the Cinergia equipment but only in the interface. If the button pressed is *Load*, for example, the interface will allow negative current setpoints.

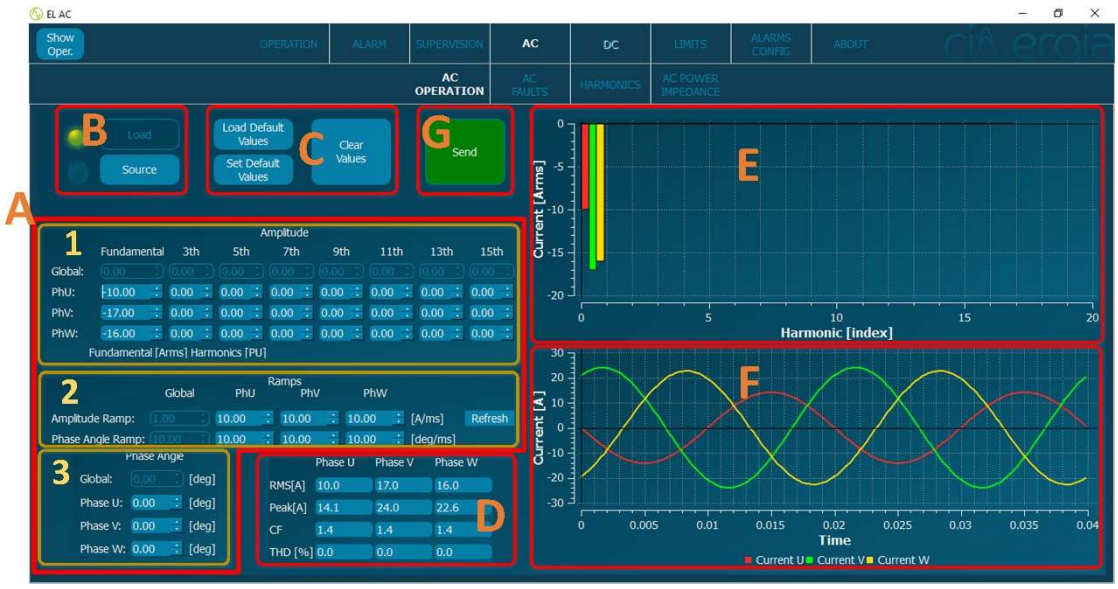

- **A:** Part of the subtab to introduce all the parameters to be sent to the converter.

1. Set the fundamental amplitude of the current setpoint in the first column. The other 7 columns are for the harmonics setpoints. The units for the first column are amperes, whereas the other columns are a percentage of the first column. From the 3th until the 11th harmonic, the percentage can go from 0% to 100% (0 to ±1) whereas 13th and 15th can reach 50% (0 to ±0.5).
2. Ramps section. It controls the softer or faster change of the setpoints of amplitude (fundamental and harmonics) and phase angles.
   Refresh button is for load the default values, which are *1V/ms* and *10deg/ms*.
3. Set the phase angle for each phase in concordance with the voltage of the same phase. For example, the first channel will be synchronized with the voltage that the equipment has in the U (delivered by an external voltage source), and the phase angle will set the angle between the voltage and the current of that channel. The maximum and the minimum are 90º and -90º.

If the user introduces a parameter which is out of the converter limits, the interface will not allow to send it. Please read the manual to know which are the limits of the converter.

- **B:** Define if the converter must behave as a load or as a source. When it is in *Load* mode (absorbing current), the only setpoints available are negative whereas when the converter is in *Source* mode (delivering current), the setpoints must be positive.
- **C:** The 3 buttons are used to help the user saving time by remembering default values of the parts **1** and **3** described above from window **A** (ramps cannot be saved). They can be established by pressing *Set Default Values* and it will save the actual parameters. After pressing this button, the user can use *Load Default values* to refresh them again. *Clear Values* will set to 0 all the numbers.
- **D:** Information part. Meanwhile the user is introducing the setpoints, the theoretical values (RMS, peak, crest factor and the total harmonic distortion) are being calculated and displayed.
- **E:** Information part. Graphs are being drawn meanwhile entering the data in the **A** part. From left to right, the values of fundamental and harmonic setpoints are being displayed.
- **F:** Information part. Graphs are being drawn meanwhile entering the data in the **A** part. This is a waveform graph and it is the same that will appear on any oscilloscope connected to the output of the converter.
- **G:** Once all the values of the parts described above are correct, the user must press *Send*. This shall be done in Run state, otherwise the setpoints will not appear in the output.

II. AC Faults

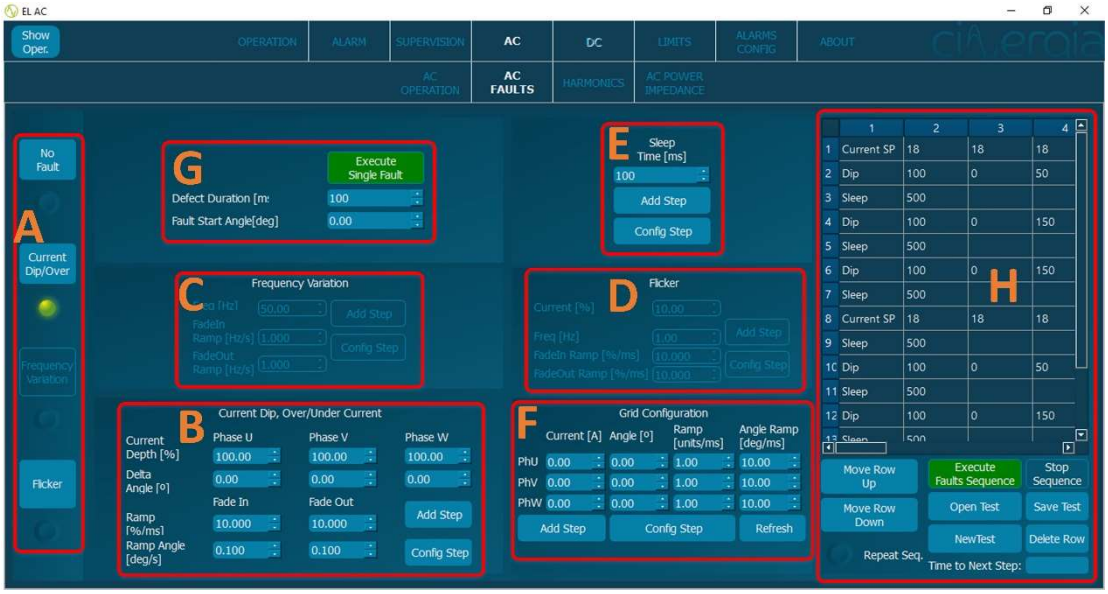

Current faults must be executed over an existing grid, so it is important to have a grid in the input and the output of the converter (it will appear in the supervision tab). As the converter is an electronic load, it is required a voltage source connected to the output before any current setpoint (fault or not) is applied.

- **A:** Selection of the fault. By selecting each fault, the corresponding part is going to be illuminated.
- **B:** Current Dip and Over/Under Current configurations. Introduce the percentage of the current and the angle of each phase. Note that 0% means 0A and 50% is the half of the actual current. A *Delta Angle* of Xº means that the current of that phase will remain all the fault with that phase angle between the current and the voltage of that channel. There are also ramps for the current and the angles. The buttons *Add Step* and *Config Step* are explained at the point **H** of this chapter.
  The following images illustrate the same current dip with different *Delta angle* (the channels are U-yellow, V-green and W-purple):

Fault duration

Delta angle = 0º

Fault duration

Delta angle = 90º

- **C:** Frequency Variation configurations is not available in the Electronic Load converter of Cinergia because it adapts its frequency to the one that reads in the output. For example, if the Electronic Load is connected to a voltage source that delivers a grid with 70Hz, the current of the converter will synchronize with it and it will appear a current with 70Hz. The range of the frequency is 10 to 400Hz and the maximum value of the current is adapting depending on the frequency.
- **D:** Flicker configurations. It will introduce an over/under current modulated by the introduced frequency. The minimum and maximum values for current and frequency are, respectively, 0%, 50% and 0.01Hz, 20Hz. For example, when the current percentage is 20%, the current reaches the actual value of current A_{RMS} ± 20%. The value of frequency represents the frequency of the modulated wave. The ramps FadeIn and FadeOut represent the %/ms of the change. The buttons *Add Step* and *Config Step* are explained at the point **H** of this chapter.
- **E:** Add pauses in between faults when creating a fault sequence. The minimum recommended sleep (pause) is 200ms. The buttons *Add Step* and *Config Step* are explained at the point **H** of this chapter.
- **F:** Create a current grid at the beginning to add faults on it or modify an existing grid in between faults. The parameters to introduce are the RMS current, the angle and ramps for all three elements of each phase. The buttons *Add Step* and *Config Step* are explained

at the point **H** of this chapter. Remember that to set the current values, it is important to have a voltage source connected to the output of the converter.

- **G:** General configurations of the fault. Set the duration of any fault and the starting angle referenced at the U channel. By pressing "Execute Single Fault" the selected fault will start with the sent parameters. The buttons *Add Step* and *Config Step* are explained at the point **H** of this chapter.

In windows **B**, **C**, **D**, **E** and **F** there are the buttons "*Add Step*" and "*Config Step*". They are used to add or modify points in the sequence created in the window **H**:

- **H:** Create or load a fault sequence. Each row contains the parameters of the defect and to add them it is necessary to introduce the desired values to the windows **B**, **C**, **D**, **E** or **F** and press "Add Step". To modify a row proceed exactly the same as if introducing another row but instead of "Add Step" press "Config Step". It is important to select the row that the user want to modify before pressing the button. To change positions or delete rows use the buttons "Move Row Up", "Move Row Down" and "Delete Row" to get the desired sequence.
  Once the sequence is ready, press "Execute Faults Sequence" and there's the possibility of repeating it by pressing "Repeat Sequence". The button "Stop Sequence" allows to stop the execution in any moment.
  The user can also open a created sequence using the button "Open test". It is also possible to save the test created in the interface by pressing "Save Test", and it is important to save it as a *.csv* file.

Remember to introduce a minimum recommended Sleep (pause) of 200ms in between faults. The following figure shows an example of a sequence created via interface.

Before introducing any fault, remember to emulate a grid.

III. Harmonics

The *Harmonics* tab allows the user to send *.csv* (coma separated value) files. The *.csv* files can be created and saved, loaded or modified and saved by the interface.

All the files can be executed as a sequence.

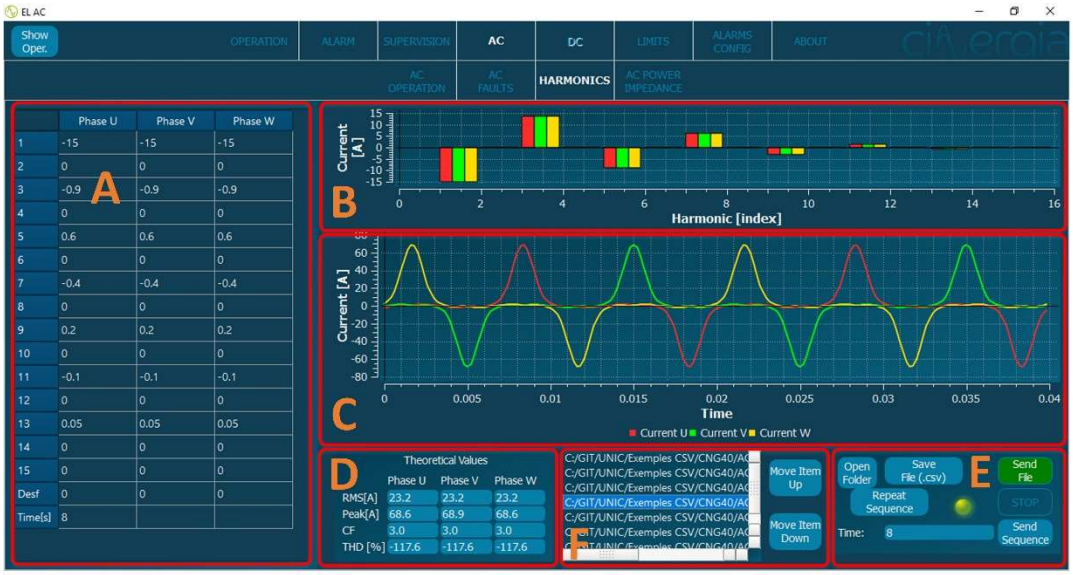

- **A:** This table shows all the values that refer to the configuration of the harmonics and it is distributed in the following way:

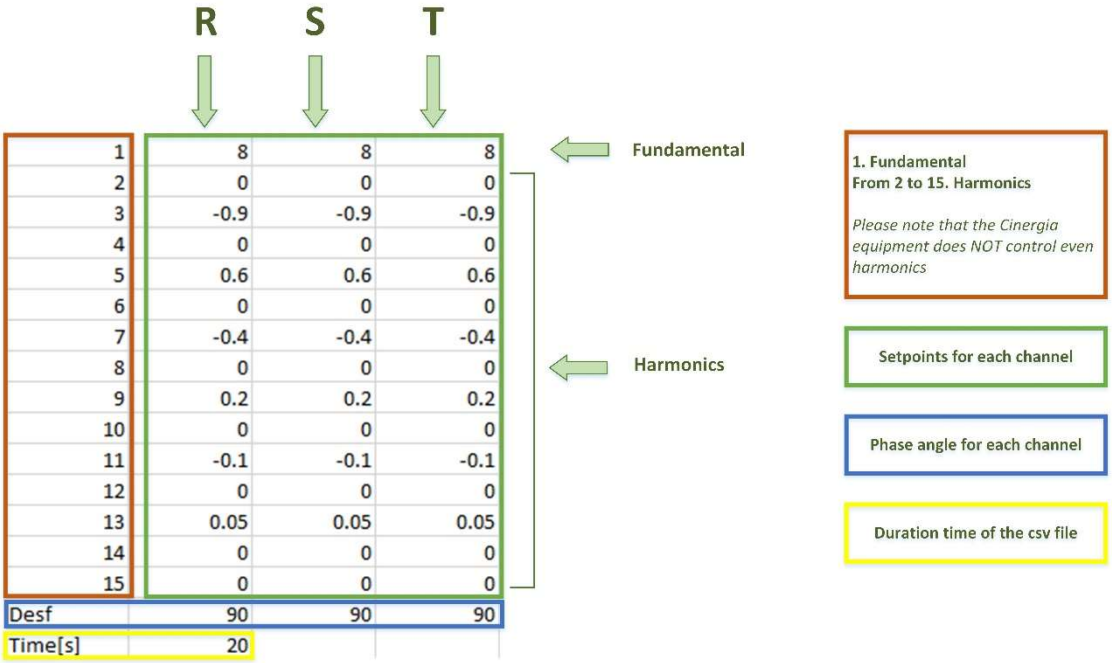

The user can write the desired values on this table of the interface to create a harmonic file to be sent or saved as it is explained in the point **E** of this chapter.

- **B:** Meanwhile the user is introducing the values for the harmonics in table **A**, the index graph is refreshing at the same time. Remember that the index graph has the fundamental (with its full value) at the left part and the harmonics (with its percentage value, positive or negative, referenced to the fundamental).

- **C:** This graph is behaving as the one before (**B**), but it draws the waveform showing how the harmonics will look like when the user uses an oscilloscope in the output (EUT side).

- **D:** Theoretical values are very useful to know which is the maximum output voltage, as well as the peak, the crest factor and the total harmonic distortion (THD).

- **E:** Open, save or send *.csv* files with the following buttons
    - *Open Folder*. Open a folder of the computer with *.csv* files in it. The files will be shown in window **F**.
    - *Save File (.csv)*. This button allows to save a created harmonic in **A** window or to modify an existing opened file.
    - *Send File*. The created file in **A** or the opened and selected file in **F** will be sent by pressing this button. To sum, the sent file will be the one shown in **A**, **B**, **C** and **D**.
    - *Send Sequence*. The user can send a sequence instead of a unique file. The file sequence to execute will be the one with the harmonic files in **F** window that the user has opened.
    - *Repeat Sequence*. By pressing this button, the LED right beside it will be illuminated and it will indicate that the sequence is going to start again when it is finished.
    - *Time*. It shows the time in seconds that the actual file will last until it goes to the next file.
    - *STOP*. The user can stop the sequence any time, but the equipment will stay in the actual file. This button is not a button to stop the converter but the sequence.

- **F:** This window will show the name and the location of the file that the user opens from the button *Open Folder* of part **E**. it is possible to select (double click) one file and the characteristics of it will be shown in windows **A**, **B**, **C** and **D**. To create the order of the sequence, click the file and move it up or down with the buttons *Move Item Up* and *Move Item Down*.

When the user creates a .csv file with excel or a text editor, it is important to write in the first column, as in the example above, the number of the fundamental and harmonic (from 1 to 15) and the words *Desf* and *Time [s]*

Each file is a state so, to create a sequence, different files must be created and saved in the same folder. From the interface, the user can visualize all the files of this folder, send each file into the converter or perform the sequence.

The same example of *csv* file explained above with *excel* is shown in the following image with a text editor. Please note that the columns are separated with comas and the decimal points are points.

```
1,8,8,8
2,0,0,0
3,-0.9,-0.9,-0.9
4,0,0,0
5,0.6,0.6,0.6
6,0,0,0
7,-0.4,-0.4,-0.4
8,0,0,0
9,0.2,0.2,0.2
10,0,0,0
11,-0.1,-0.1,-0.1
12,0,0,0
13,0.05,0.05,0.05
14,0,0,0
15,0,0,0
Desf,90,90,90
Time[s],6,,
```

IV. AC Power Impedance

Set the setpoints values for impedance and power. As it is AC current, the impedance is composed by resistance, inductance and capacitance and the power by active and reactive. This tab also allows to create sequence with combinations of this two working modes.

The 2 buttons *Load* and *Source* described in the following chapter is used only for helping the user to understand whereas the equipment is delivering or injecting current. It can be important, for example, if the EUT connected in the output only allows one kind of current (injected or delivered). These buttons do not make changes in the Cinergia equipment but only in the interface. If the button pressed is *Load*, for example, the interface will allow negative power setpoints. Please note that in Impedance mode, the only mode that make sense is *Load*.

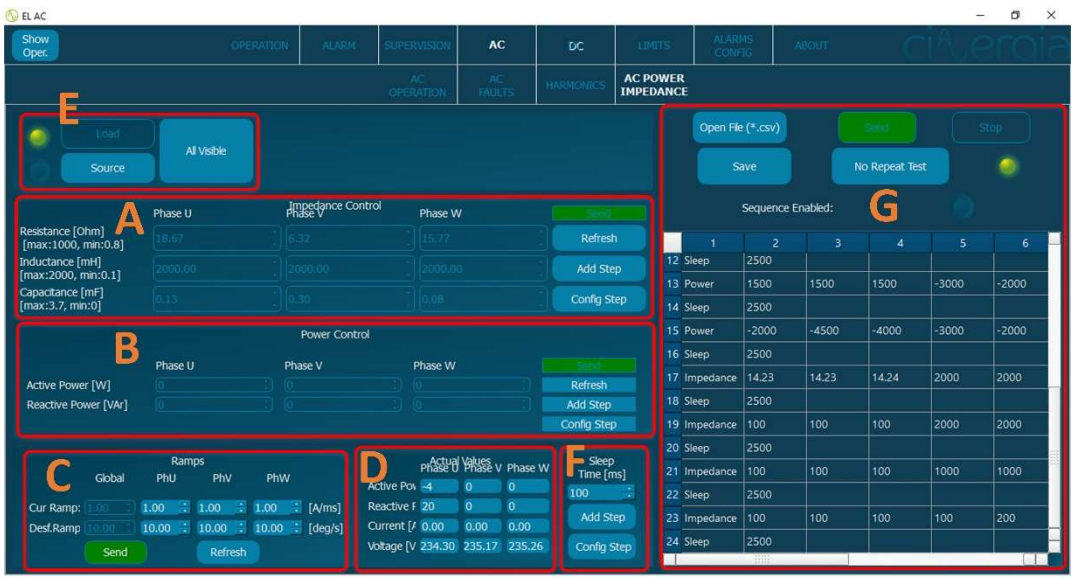

- **A:** Impedance control. When the equipment is in impedance mode (the mode is selected in the button *Show Operation* explained in the chapter 1.1 part D of this manual) this part will be illuminated and the user will be able to introduce the impedance setpoints. Each column is for each phase and the rows are for the resistance, inductance and capacitance setpoints respectively. Once the parameters are ready, press *Send*. If the converter is in impedance mode and configured as a source, the equipment will not send the setpoints, so it is important that the converter is in load state (windows **E**) when it is in impedance mode.
  The button *Refresh* will make appear the internal values of the equipment in that moment. *Add Step* and *Config Step* are explained in the part **F** of this chapter.

- **B:** Power control. When the equipment is in power mode (the mode is selected in the button *Show Operation* explained in the chapter 1.1 part D of this manual) this part will be illuminated and the user will be able to introduce the power setpoints. Each column is for each phase and the rows are for the active and reactive power setpoints respectively. Once the parameters are ready, press *Send*.
  The button *Refresh* will make appear the internal values of the equipment in that moment. *Add Step* and *Config Step* are explained in the part **F** of this chapter.

If the user introduces a parameter which is out of the converter limits, the interface will not allow to send it. Please read the manual to know which are the limits of the converter.

- **C:** Ramps section. Set the ramps for the current and the phase angle. This ramp values are the same than the ramps explained in the chapter 1.5.1 A part 2.
- **D:** Information part. Meanwhile the user is introducing the setpoints, the theoretical values (Active Power, Reactive Power, Current and Voltage) are being calculated and displayed.
- **E:** Define if the converter must behave as a load or as a source. When it is in *Load* mode (absorbing current), the only setpoints available are negative whereas when the converter is in *Source* mode (delivering current), the setpoints must be positive. The button *All Visible* allows the user to see and write the parameters of parts **A**, **B** and **C**. It is useful to create the sequences explained in the following part **G**.
- **F:** The Sleep Time is the configurable time that the sequence will use to remain in a row of setpoints. It is explained in the part **G**

In windows **A**, **B** and **F** there are the buttons "*Add Step*" and "*Config Step*". They are used to add or modify points in the sequence created in the window **G**:

- **G:** Create or load an impedance and/or power sequence. Each row contains the parameters of the setpoint and to add them it is necessary to introduce the desired values to the windows **A** or **B** and press *Add Step*. To modify a row, proceed exactly the same as if introducing another row but instead of *Add Step* press *Config Step*. It is important to select the row that the user want to modify before pressing the button.

Once the sequence is ready, press *Send* and there's the possibility of repeating it by pressing *Repeat Sequence*. The button *Stop* allows to stop the execution in any moment. The user can also open a created sequence using the button *Open File (*.csv)*. It is also possible to save the test created in the interface by pressing *Save*, and it is important to save it as a *.csv* file.

9.2.5. Limits

The user can define the limits of the equipment in this tab. The converter has its own factory limits, but it is possible to introduce new ones.

The condition for these new limits is that they must be lower (in case of maximum limits) or higher (in case of minimum limits) than the factory ones, otherwise the equipment will introduce the factory limits.

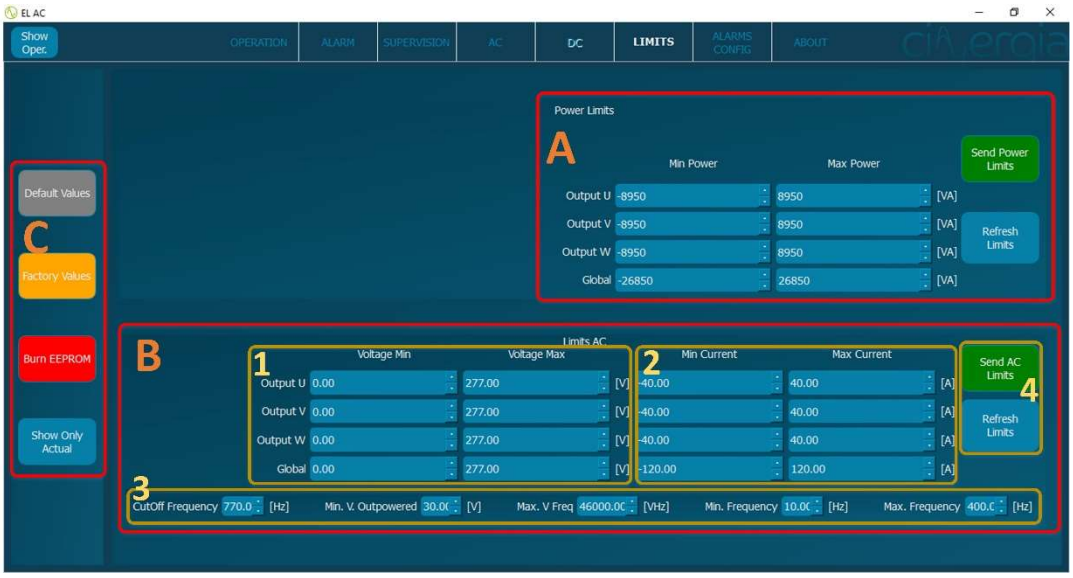

- **A:** Power Limits. The user can set the maximum and minimum limits for each phase. Once the limits are ready, press *Send Power Limits*. By pressing *Refresh Limits*, the converter will deliver the actual limit values.

If the user introduces limit values higher the accepted ones, the converter will set the maximum allowed values. By pressing *Refresh Limits*, the user will know which are the values of the converter in that moment.

- **B:** Voltage and current limits section.
  1. Voltage limits. The user can set the maximum and minimum limits for each phase.

2. Current limits. The user can set the maximum and minimum limits for each phase. These current limits are used in current mode (positive and negative) and in power mode (positive but not negative).
3. Set the limits for the frequency parameters.
4. Once the limits are ready, press *Send AC Limits*. When the user presses *Refresh Limits*, the converter will return the actual limit values. This last button is useful to realise if the introduced limits are higher that the allowed ones.

If the equipment is in RUN mode with a value that is outside the range of the new introduced limits, it will change the actual setpoint. For example, if the converter is in current mode with a value of 20A and the user introduces (and sends) a limit of 15A, the equipment will go to 15A and remain there. If the limit is only introduced in one channel, it is going to be that channel the one which go to that limit.

- **C:** These buttons allow the user to operate with the values of the limits.
  - *Default Values.* The user can define default values that will remember the equipment as long as it is switched on and lower than the *Factory Values*.
  - *Factory Values.* The equipment has its own factory values depending on the rated power. This button will make these parameters appear in the visible windows.
  - *Burn EEPROM.* To save the sent values to the equipment and make it remember them even it is switched off, the EEPROM can be burnt. This step requires a password.
  - *All Visible.* This button unfreeze all the windows so that the user can set the *Default Values*. Remember that the limits are not introduced to the equipment until *Send Limits* buttons of each window (**A** and **B**) are pressed.

When the converter is switched off and on again, these limits will be erased and substituted for the factory ones. It is possible to save limits in the equipment in the EEPROM memory, but a password is required

9.2.6. Alarms Configuration

This tab sets the alarms of the equipment. The difference between *Limit* and *Alarm* is that the equipment can work during a certain time above the limits, but if there is some value that goes further than some alarm parameter, the equipment will go to alarm state.

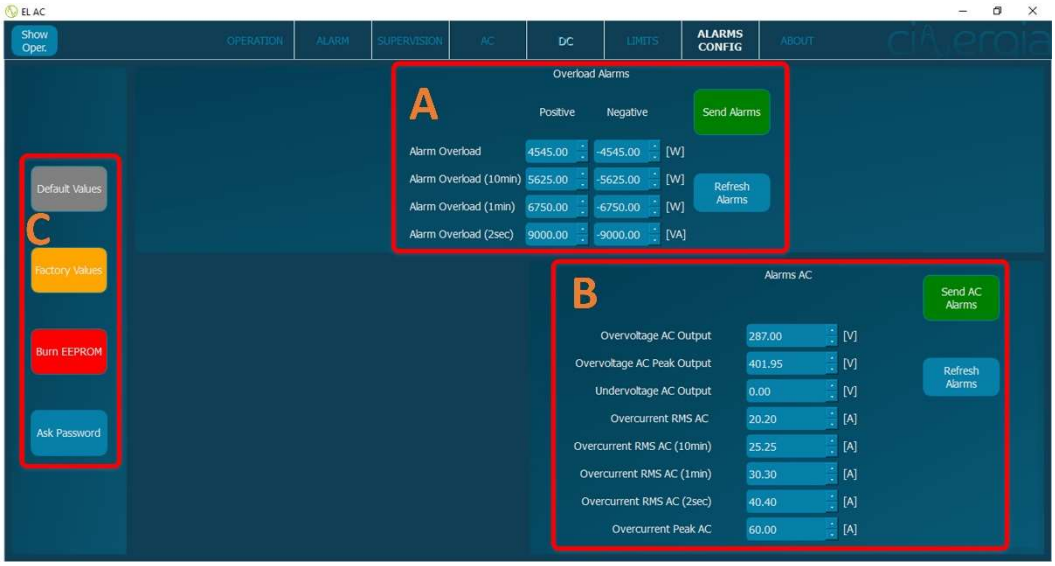

- **A:** Set the overload alarms and once the values are ready press *Send Alarms* button. If the user presses *Refresh Alarms*, the parameters that the converter has in that moment will appear in the window.
- **B:** Set the AC alarms and once the values are ready press *Send AC Alarms* button. If the user presses *Refresh Alarms*, the parameters that the converter has in that moment will appear in the window.
- **C:** These buttons allow the user to operate with the values of the limits.
    - *Default Values.* The user can define default values that will remember the equipment as long as it is switched on and lower than the *Factory Values*.
    - *Factory Values.* The equipment has its own factory values depending on the rated power. This button will make these parameters appear in the visible windows.
    - *Burn EEPROM.* To save the sent values to the equipment and make it remember them even it is switched off, the EEPROM can be burnt. This step requires a password.
    - *Ask Password.* A popup message will appear asking the password. This allows to burn eeprom.

9.2.7. About

This tab shows the characteristics of the equipment.

- **A:** Extras of the converter. By entering the password delivered by Cinergia, it is possible to unblock the available extras. It has an additional cost.
- **B:** Basic description parameters of the equipment. This window is useful for Cinergia in case of maintenance or reparation.

10. WARRANTY AND MAINTENANCE

Fans and capacitors must be replaced at the end of their useful lifetime.

Inside the equipment there are dangerous voltages and metallic parts at high temperatures even when the equipment is stopped. The direct contact can cause electrocutions and burns. All the operations must be done by authorized technical staff.

10.1. Replacing the input fuses

This operation must be performed by personnel experienced with electrical systems. The direct contact can cause electrocutions and burns.

In order to replace the input fuses follow procedure below:

1. Stop the converter following the instructions of FULL STOP
2. Turn the output switch-disconnector (Q2) to the OFF position
3. Open the fuse holder and replace the fuses

These fuses can only be replaced by new ones of exactly the same model.

10.2. Fans

The useful lifetime of the fans used to cool the power circuits depends on the use and environment conditions. It is recommended their preventive replacement by authorized technical staff.

10.3. DC bus capacitors

The useful lifetime of the DC bus capacitors and those ones used in the input and output filtering depends on the use and the environment conditions. It is recommended their preventive replacement by authorized technical staff.

10.4. Warranty

CINERGIA warrants that the delivered equipment is free from any defect affecting the functioning thereof for a time period not exceeding one (1) year from the Ex Works delivery date. If a purchased CINERGIA product becomes defective because of a faulty component or manufacturing, at any time during its standard warranty period, CINERGIA shall provide one of the following solutions:

• On-site technical assistance

• Product or component repair at CINERGIA's premises

• Replacement of the defective product or component

The decision whether to perform the assistance on-site, to repair or replace the faulty product and/or component shall be taken in any case exclusively by CINERGIA.

10.5. Claim procedure

The warranty rights can be exercised during the validity of the warranty period and immediately upon detecting any abnormalities, except in the case of visible defects, in which case the claim shall be submitted within a maximum time of 7 days from the date of receipt of the equipment and always prior to its installation.

If defect of malfunction is detected, please proceed as follows:

• Immediately notify in writing CINERGIA by submitting a brief report describing the type of fault detected and all the data contained in the product data plate, attaching a copy of the purchase invoice/receipt. Such documentation shall be sent to the email address of the Sales Team (comercial@cinergia.coop).

• Upon receiving the documentation, CINERGIA will analyse it to decide whether the intervention required is covered by the warranty terms described herein.

• If the claim is covered by the warranty terms, CINERGIA shall provide on-site technical assistance or, alternatively, can request the shipping of the defective product and/or component to have it repaired at CINERGIA premises. At last, CINERGIA shall decide to send a replacement product and/or component. The faulty product and/or component shall be returned to CINERGIA. Any shipping damages attributable to improper packaging shall not be covered by warranty. The faulty product should be shipped back in upright position over a pallet and properly covered and protected.

• Failure to return the replaced equipment within 10 (ten) standard days shall authorize CINERGIA to invoice the equipment supplied as replacement.

• In case the defect of the returned equipment is deemed not to be covered by the warranty, CINERGIA shall issue an invoice to the purchaser for the repair activity.

• If on arrival at CINERGIA's premises the returned equipment is deemed to be in perfect operating conditions, CINERGIA shall be authorized to issue an invoice for all the costs resulting from its replacement (analysis and testing of the equipment and shipping costs).

• CINERGIA reserves the right to provide a different model of product and/or component to process the claims covered by the warranty terms, in case the original model and/or component is out of production.